Manualslib.com - The Global Manuals Library

HUSQVARNA 36 WORKSHOP MANUAL

Quick Links

Dismantling and Reassembly of the Entire Chain Saw
Technical Data

Table of Contents

List of contents
Table of Contents
Introduction
Safety
Updates
Layout
Use
Repair of a specific sub-assembly
Dismantling and reassembly of the entire chain saw
Safety regulations
General Instructions
Special instructions
Technical data
cm/inches
Tools for all chain saws
Tools for saws 36 and 41
Tools for saws 40, 45, 51 and 55
Tools for saws 42, 242 and 246
Tools for saws 254, 257 and 262
Tools for saws 61, 268 and 272
Tools for saws 281 and 288
Tools for saws 394 and 3120
List of tools
Saws 36 and 41
Character key

Service data
Saws 42, 242 and 246
Service data
Saws 40 and 45
Service data (saws 51/55)
Saws 51 and 55
Saws 254 and 257
Saw 262
Saws 61, 268 and 272
Saws 281 and 288
Saw 394
Saw 3120
Trouble shooting schematic
Starting
Idling (low rpm)
High rpm
Acceleration and retardation
Trouble shooting methods
Safety equipment
Chain brake
Dismantling
Cleaning and Inspection
Assembly
Checking brake operation
Chain catcher
Description
Replacing

Muffler
Stop switch
Throttle lock
Starter
Changing the ferrule
Electrical system
Ignition system
Fitting the spark plug cover
Handle heating
Trouble shooting
Checking the generator
Check the handle loop
Checking the heat loops in the rear handles
Checking the power switch
Centrifugal clutch
Lubrication system
Dismantling the oil pump's worm gear
Assembling the worm gear
Assembling the oil pump
Carburettor
Design
Operation
Plugs
”Semi fixed jet”/”fixed jet”
Tillotson HS 228 B
Tillotson HS 255 B
Tillotson HS 260 A

Walbro HDA and HD
Walbro WJ
Walbro WG
Walbro WT
ZAMA C1Q-EL1
"Semi fixed jet"/"fixed jet"
Walbro HDA och HD
Pressure testing
Refitting onto chain saw
Air filter
268K, 272K and 272S
Main filter
Tank unit
Tank unit
Anti-vibration system
PISTON AND CYLINDER
Piston and cylinder
Faults and causes
Decompression valve
Crankcase and cylinder
Crankcase and crankshaft
Bar bolts
Changing the seals
Assembly positions starter side
Assemblt position on the clutch side
Other ManualsLib Projects

Husqvarna Chain Saws

Workshop Manual

101 88 55-26

Downloaded from www.Manualslib.com manuals search engine

LIST OF CONTENTS

Introduction 3
Safety regulations 5
Technical Data 6
Tools 14
Service data 20
Trouble shooting 40
Safety equipment 42
Starter 57
Electrical system 61
Centrifugal clutch 67
Lubrication system 70
Carburettor 83
Air filter 101
Tank unit 103
Anti-vibration system 106
Piston cylinder 108
Crankcase and crankshaft 114

Downloaded from www.Manualslib.com manuals search engine

INTRODUCTION

General

This workshop manual provides a detailed description of procedures for trouble shooting, repair and testing of the chain saws. Safety precautions that should be taken during repair are also described.

This workshop manual applies to the engine assembly in the following chain saws:

36	**257**
40	**262XP**
	268
41	
42	**272XP**
	268K
45	**272K**
51	**272S**
55	
61	**281XP**
	288XP
242XP	
246	**394XP**
254XP	**3120XP**

Safety

Note!
The section dealing with safety should be read and understood by all who carry out repair or service work on the chain saw.

There are warning symbols on the chain saw. If a warning symbol has been damaged or is missing, it must be replaced immediately in order to maximise safety when the saw is in use.

Target group

This workshop manual is written for personnel that are assumed to have general knowledge of service and repair of small engines.

The workshop manual should be read and understood by all personnel carrying out service and repair work on the chain saw. The manual is also suitable for use in the training of new employees.

Updates

As production continues, changes will be introduced successively to the chain saw. If at any time these changes influence service and/or spares, special service announcements will be sent out, which means that this manual will cease to be current with time. In order to avoid problems, the manual should always be read together with all service announcements that apply to the specific model of chain saw.

Tools

For specific procedures special tools are required. In this workshop manual, all the service tools required are listed. Use of the tools is described in appropriate sections.

Always use Husqvarna original:

- Spare parts
- Service tools
- Accessories

Layout

The descriptive sections in this workshop manual are set out in a number of flow diagrams. When carrying out repairs on a specific chain saw, follow the signs that apply to the saw in question.

Diagrams are not numbered as they are linked to the actual text, either by lines or by being in the same box.

Positional directives to components inside the diagrams are designated with A, B, etc. and start from A again in each new section.

Downloaded from www.Manualslib.com manuals search engine

INTRODUCTION

Use

This workshop manual can be used in two different ways:

- Repair of a specific sub-assembly
- Dismantling and reassembly of the entire chain saw

Repair of a specific sub-assembly

When a specific sub-assembly on the chain saw is to be repaired, proceed as follows:

1. Refer to the page referring to the relevant sub-assembly.

2. Carry out the steps: Dismantling
   Cleaning and inspection
   Reassembly

Dismantling and reassembly of the entire chain saw

When the entire chain saw is to be dismantled and reassembled, proceed as follows:

1. Refer to page 57, which deals with the **Starter** and carry out the instructions under the heading **Dismantling**.

2. Work forwards through the manual and carry out **Dismantling** instructions in the order that the sections occur.

3. Return to the **Starter** on page 58 and follow the instructions under **Cleaning and Inspection**.

4. Work forward through the manual and carry out **Cleaning and Inspection** in the order that the sections occur.

5. Order or collect all the required spare parts from the spare parts stores.

6. In order to **Assemble** the chain saw, proceed as follows:

- Refer to pages 117-120 which deals with the **Crankcase** and carry out the instructions under **Assembly**.

- Refer to pages 111-112 which deals with the **Piston and Cylinder** and carry out the instructions under **Assembly**.

- Refer to pages 107 which deals with the **Anti-vibration system** and carry out the instructions under **Assembly**.

- Refer to page 105 which deals with the **Tank unit** and carry out the instructions under **Assembly**.

Continue to work backwards through the manual and carry out **Assembly** instructions as the sections occur.

In order to improve understanding, some sections begin with a **Description** of the relevant sub-assembly.

Downloaded from www.Manualslib.com manuals search engine

SAFETY REGULATIONS

General Instructions

Workshops where chain saws are serviced must be equipped with safety equipment as set out in local directives.

No one should repair a chain saw without first having read and understood the contents of this workshop manual.

The following warning texts are to be found in this manual in certain places. The warning texts occur before the procedure to which they refer.

WARNING!
The warning text indicates a risk of personal injury if instructions are not followed.

NOTE!
The warning text indicates a risk of damage to equipment if instructions are not followed.

The chain saw is type approved with regard to safety according to applicable legal requirements when fitted with the cutting equipment specified in the Operator's Manual. Equipping the saw with other equipment or accessories and spare parts not approved by Husqvarna can result in non compliance with these safety requirements and liability for persons carrying out such modifications.

Special instructions

The fuel used in the chain saw poses the following hazards:
1. The fluid and its fumes are poisonous.
2. Can cause eye and skin irritation.
3. Can cause breathing difficulties
4. Is highly inflammable.

The bar, chain and clutch cover (chain brake) must be assembled before the chain saw is started, otherwise the clutch may come loose causing personal injury.

Wear ear muffs when testing the chain saw.

Do not use the saw until it has been adjusted so that the chain does not rotate when idling.

Bear in mind the fire risk. The saw can produce sparks that can cause a fire hazard..

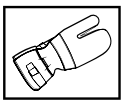

After testing, do not touch the silencer until it has cooled. Risk of burns. This especially applies if the saw is fitted with a catalytic converter. The coating on and in the catalytic element is hazardous to touch. Use protective gloves when working on the catalytic converter.

Inadequate chain lubrication can result in the chain breaking, which can cause serious or fatal injury.

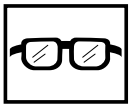

Make sure that the starter recoil spring does not fly out and cause personal injury. Release the spring tension before the cord pulley is removed.

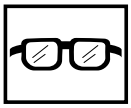

When removing the pressure spring for the chain brake, ensure that the brake is in the 'on' position which reduces the spring tension, otherwise the spring can fly out causing personal injury.

After repair, the chain brake must be checked in accordance with the instructions on page 47.

When replacing the crankshaft bearings note that the crankcase halves are hot. Use protective gloves.

When using compressed air, the air jet should never be pointed towards the body. Air can be forced into the blood stream, which can cause fatality.

Downloaded from www.Manualslib.com manuals search engine

TECHNICAL DATA

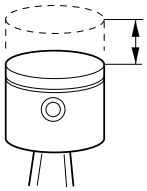
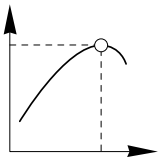

	Displacement cm³	Bore mm	Stroke mm	Max. power at r/min
36	36	38.0	32.0	9000
40	40	40.0	32.0	9000
41	40	40.0	32.0	9000
42	42	42.0	30.0	9300
45	44	42.0	32.0	9000
51	51	45.0	32.0	9000

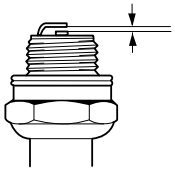
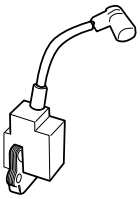
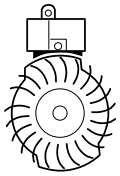
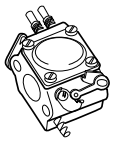

	Spark plug gap mm/inches	Ignition system	Air gap mm/inches	Carburettor
36	0.5/ .02	PHELON	0.3/ .012	WALBRO WT 239
40	0.5/ .02	PHELON	0.3/ .012	ZAMA C1Q-EL1
41	0.5/ .02	PHELON	0.3/ .012	WALBRO WT 239
42	0.5/ .02	SEM AM 7	0.3/ .012	WALBRO HDA 98
45	0.5/ .02	PHELON	0.3/ .012	ZAMA C1Q-EL1
51	0.5/ .02	ELECTROLUX ET	0.3/ .012	WALBRO WT 170

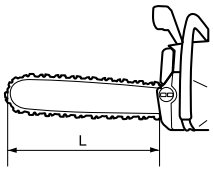

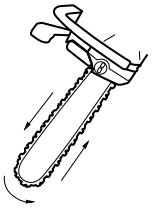
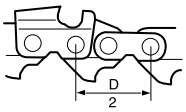

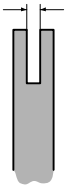

	Bar length cm/inches	Chain speed m/s	Chain pitch inches	Drive link gauge mm/inches
36	33-46/13-18	17.3/9000 rpm	.325-3/8	1.3/ .050
40	33-46/13-18	17.4/8500 rpm	.325	1.3/ .050
41	33-46/13-18	17.3/9000 rpm	.325-3/8	1.3/ .050
42	28-46/11-18	17.9/9300 rpm	.325	1.5/ .058 / 1.3/ .050[1)]
45	33-46/13-18	17.4/8500 rpm	.325	1.3/ .050
51	33-51/13-20	17.4/9000 rpm	.325-3/8	1.5/ .058 / 1.3/ .050[1)]

[1)] From May 1996

Downloaded from www.Manualslib.com manuals search engine

TECHNICAL DATA

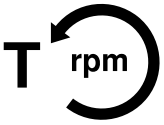

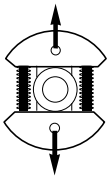
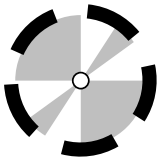
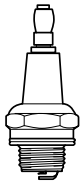

	Idling speed r/min	Engagement speed r/min	Max. speed r/min	Spark plug Champion
36	3000	4500	13000	RCJ 7 Y
40	2500	3600	12500	RCJ 7 Y
41	3000	4500	13000	RCJ 7 Y
42	2700	3800	14500	RCJ 7 Y
45	2500	3600	12500	RCJ 7 Y
51	2500	3700	12500	RCJ 7 Y

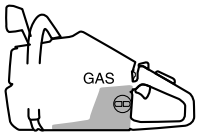

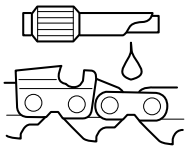
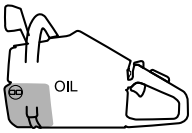

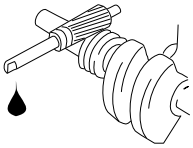

	Fuel tank volume Litres	Oil pump capacity cm^3/min at 8.500 rpm	Oil tank volume Litres	Automatic oil pump
36	0.4	7	0.2	Yes
40	0.5	8	0.25	Yes
41	0.4	7	0.2	Yes
42	0.5	3-7	0.27	Yes
45	0.5	8	0.25	Yes
51	0.6	10	0.3	Yes

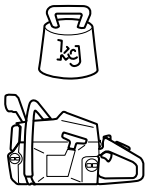

	Weight without bar and chain kg	Weight with bar and chain kg/lbs	Handle heater Watt/ r/min
36	4.6	5.3 (13")	No
40	4.7	5.4 (13")	No
41	4.6	5.3 (13")	No
42	4.7	5.5 (13")	No
45	4.7	5.4 (13")	No
51	5.2	6.2 (15")	No

Downloaded from www.Manualslib.com manuals search engine

TECHNICAL DATA

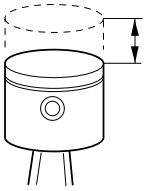
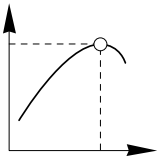

	Displacement cm³	Bore mm	Stroke mm	Max. power at r/min
55	53	46.0	32.0	9000
61	62	48.0	34.0	8300
242XP	42	42.0	30.0	9900
246	46	44.0	30.0	9000
254XP	54	45.0	34.0	9300
257	57	46.0	34.0	9000

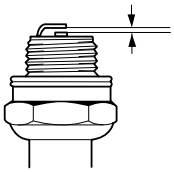
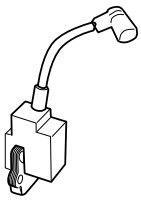
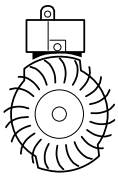

	Spark plug gap mm/inches	Ignition system	Air gap mm/inches	Carburettor
55	0.5/ .02	ELECTROLUX ET	0.3/ .012	WALBRO WT 170
61	0.5/ .02	ELECTROLUX ET	0.3/ .012	TILLOTSON HS 254
242XP	0.5/ .02	SEM AM 7	0.3/ .012	WALBRO HDA 98
246	0.5/ .02	SEM AM 7	0.3/ .012	WALBRO HDA 98
254XP	0.5/ .02	ELECTROLUX ET	0.3/ .012	WALBRO HDA 35B
257	0.5/ .02	ELECTROLUX ET	0.3/ .012	WALBRO HDA 120

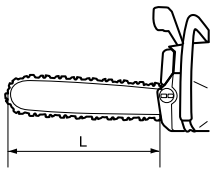

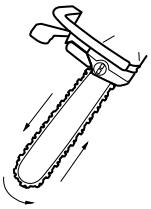
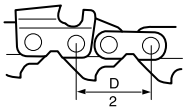

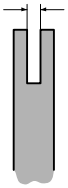

	Bar length cm/inches	Chain speed m/s	Chain pitch inches	Drive link gauge mm/inches
55	38-51/15-20	17.4/9000 rpm	.325-3/8	1.5/ .058 / 1.3/ .050 [1)]
61	38-51/15-20	18.4/8300 rpm	3/8	1.5/ .058
242XP	28-46/11-18	19.1/9900 rpm	.325	1.5/ .058 / 1.3/ .050 [1)]
246	28-46/11-18	17.3/9000 rpm	.325	1.5/ .058 / 1.3/ .050 [1)]
254XP	33-51/13-20	17.3/9300 rpm	.325-3/8	1.5/ .058
257	33-51/13-20	17.3/9000 rpm	.325-3/8	1.5/ .058

[1)] From May 1996

Downloaded from www.Manualslib.com manuals search engine

TECHNICAL DATA

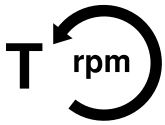

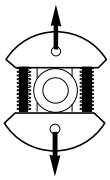
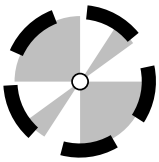
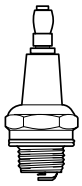

	Idling speed r/min	Engagement speed r/min	Max. speed r/min	Spark plug Champion
55	2500	3700	12500	RCJ 7 Y
61	2500	3700	12000	RCJ 7 Y
242XP	2700	3900	15500	RCJ 7 Y
246	2700	3900	15000	RCJ 7 Y
254XP	2700	3700	13800	RCJ 7 Y
257	2700	3700	13500	RCJ 7 Y

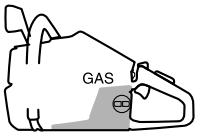

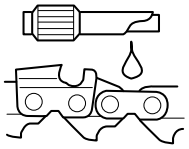
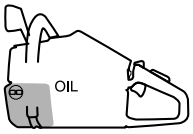

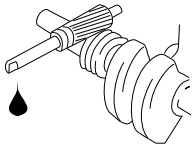

	Fuel tank volume Litres	Oil pump capacity cm³/min at 8.500 rpm	Oil tank volume Litres	Automatic oil pump
55	0.6	10	0.3	Yes
61	0.75	4/8/12/17	0.45	Yes
242XP	0.5	3-7	0.27	Yes
246	0.5	3-7	0.27	Yes
254XP	0.6	3-10	0.3	Yes
257	0.6	3-10	0.3	Yes

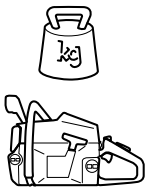

	Weight without bar and chain kg	Weight with bar and chain kg/lbs	Handle heater Watt/ r/min
55	5.2	6.2 (15")	No
61	6.1	7.1 (15")	No
242XP	4.7	5.5 (13")	65/10.000
246	4.7	5.5 (13")	No
254XP	5.4	6.3 (13")	65/10000
257	5.6	6.6 (13")	65/10000

Downloaded from www.Manualslib.com manuals search engine

TECHNICAL DATA

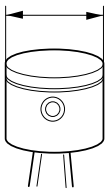
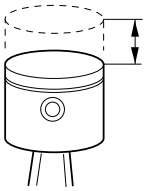
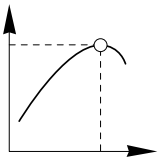

	Displacemennt cm³	Bore mm	Stroke mm	Max. power at r/min
262XP	62	48.0	34.0	9600
268	67	50.0	34.0	9000
272XP	72	52.0	34.0	9300
268K	67	50.0	34.0	9000
272K	72	52.0	34.0	9300
272S	72	52.0	34.0	9300

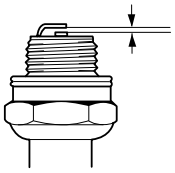
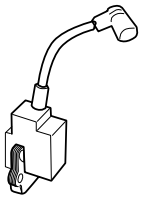
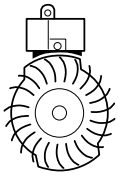

	Spark plug gap mm/inches	Ignition system	Air gap mm/inches	Carburettor
262XP	0.5/ .02	ELECTROLUX ET	0.3/ .012	WALBRO HDA 120
268	0.5/ .02	ELECTROLUX ET	0.3/ .012	TILLOTSON HS 260
272XP	0.5/ .02	ELECTROLUX ET	0.3/ .012	TILLOTSON HS 260
268K	0.5/ .02	ELECTROLUX ET	0.3/ .012	TILLOTSON HS 255
272K	0.5/ .02	ELECTROLUX ET	0.3/ .012	TILLOTSON HS 255
272S	0.5/ .02	ELECTROLUX ET	0.3/ .012	TILLOTSON HS 255

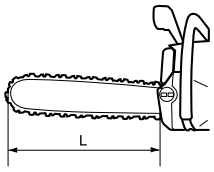

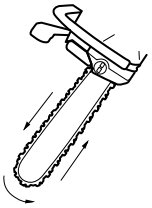
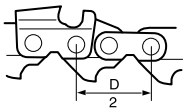

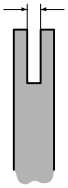

	Bar length cm/inches	Chain speed m/s	Chain pitch inches	Drive link gauge mm/inches
262XP	33-51/13-20	18.5/9600 rpm	.325-3/8	1.5/ .058
268	38-51/15-20	18.4/9000 rpm	3/8	1.5/ .058
272XP	38-51/15-20	20.0/9300 rpm	3/8	1.5/ .058
268K	-	-	-	-
272K	-	-	-	-
272S	-	-	-	-

Downloaded from www.Manualslib.com manuals search engine

TECHNICAL DATA

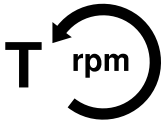

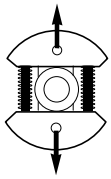
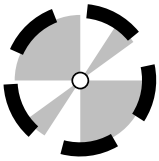
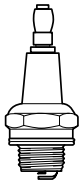

	Idling speed r/min	Engagement speed r/min	Max. speed r/min	Spark plug Champion
262XP	2700	3400	13500	RCJ 7 Y
268	2500	3500	12500	RCJ 7 Y
272XP	2500	3500	13500	RCJ 7 Y
268K	2500	3500	10000	RCJ 7 Y
272K	2500	3500	10000	RCJ 7 Y
272S	2500	3500	10000	RCJ 7 Y

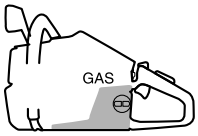

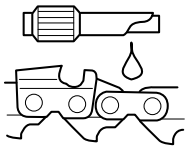
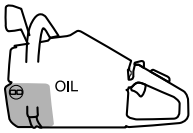

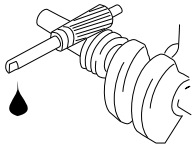

	Fuel tank volume Litres	Oil pump capacity cm^3/min at 8.500 rpm	Oil tank volume Litres	Automatic oil pump
262XP	0.6	6.5-13.5	0.3	Yes
268	0.75	4/9/13/17	0.45	Yes
272XP	0.75	5/9/14/19	0.45	Yes
268K	0.75	-	-	-
272K	0.75	-	-	-
272S	0.75	-	-	-

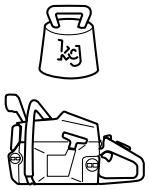

	Weight without chain and bar kg	Weight with chain and bar kg/lbs	Handle heater Watt/ r/min
262XP	5.8	6.8 (13")	65/10000
268	6.2	7.2 (15")	65/10000
272XP	6.3	7.3 (15")	65/10000
268K	9.5	-	-
272K	9.6	-	-
272S	21.0 (including carriage)	-	-

Downloaded from www.Manualslib.com manuals search engine

TECHNICAL DATA

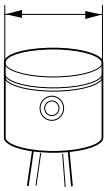
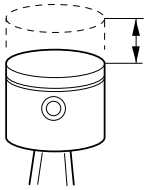
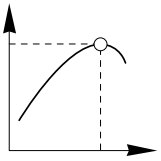

	Displacement cm³	Bore mm	Stroke mm	Max. power at r/min
281XP	81	52.0	38.0	9000
288XP	87	54.0	38.0	9300
394XP	94	56.0	38.0	8800
3120XP	119	60.0	42.0	9000

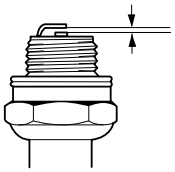
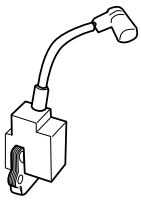
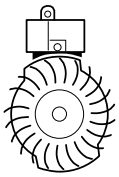
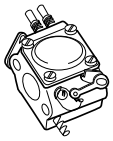

	Spark plug gap mm/inches	Ignition system	Air gap mm/inches	Carburettor
281XP	0.5/ .02	SEM AM 7	0.3/ .012	TILLOTSON HS 228
288XP	0.5/ .02	SEM AM 7	0.3/ .012	TILLOTSON HS 228
394XP	0.5/ .02	SEM AM 44	0.3/ .012	WALBRO WJ 39
3120XP	0.5/ .02	SEM AM 37	0.3/ .012	WALBRO WG 6

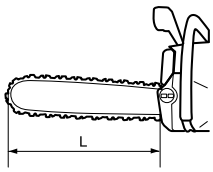

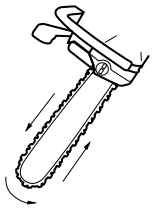
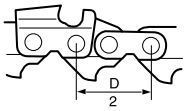

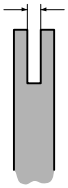

	Bar length cm/inches	Chain speed m/s	Chain pitch inches	Drive link gauge mm/inches
281XP	38-71/15-28	20.0/9000 rpm	3/8	1.5/ .058
288XP	38-71/15-28	20.7/9300 rpm	3/8	1.5/ .058
394XP	46-91/18-36	19.6/8800 rpm	3/8-.404	1.5/ .058 - 1.6/.063
3120XP	60-107/24-42	20.1/9000 rpm	.404	1.6/ .063

Downloaded from www.Manualslib.com manuals search engine

TECHNICAL DATA

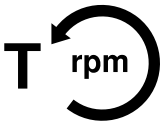

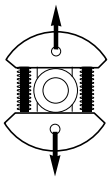
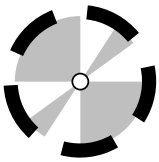
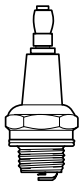

	Idling speed r/min	Engagement speed r/min	Max. speed r/min	Spark plug Champion
281XP	2500	3200	12500	RCJ 6 Y
288XP	2500	3200	12500	RCJ 6 Y
394XP	2500	3400	12500	RCJ 6 Y
3120XP	2500	3300	11500-12500	RCJ 7 Y

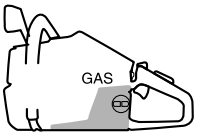

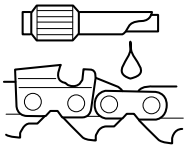
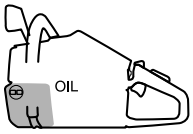

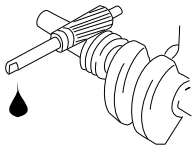

	Fuel tank volume Litres	Oil pump capacity cm³/min at 8.500 rpm	Oil tank volume Litres	Automatic oil pump
281XP	0.9	9/12/15/18	0.5	Yes
288XP	0.9	9/12/15/18	0.5	Yes
394XP	0.9	14-21	0.5	Yes
3120XP	1.25	8-51	0.7	Yes

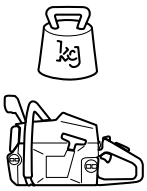

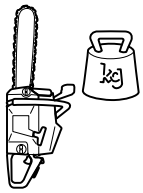

	Weight without bar and chain kg	Weight with bar chain kg/lbs	Handle heater Watt/ r/min
281XP	7.5	8.7 (18")	56/7200
288XP	7.5	8.7 (18")	56/7200
394XP	7.9	9.2 (18")	65/10000
3120XP	10.4	12.3 (28")	No

Downloaded from www.Manualslib.com manuals search engine

Tools for all chain saws

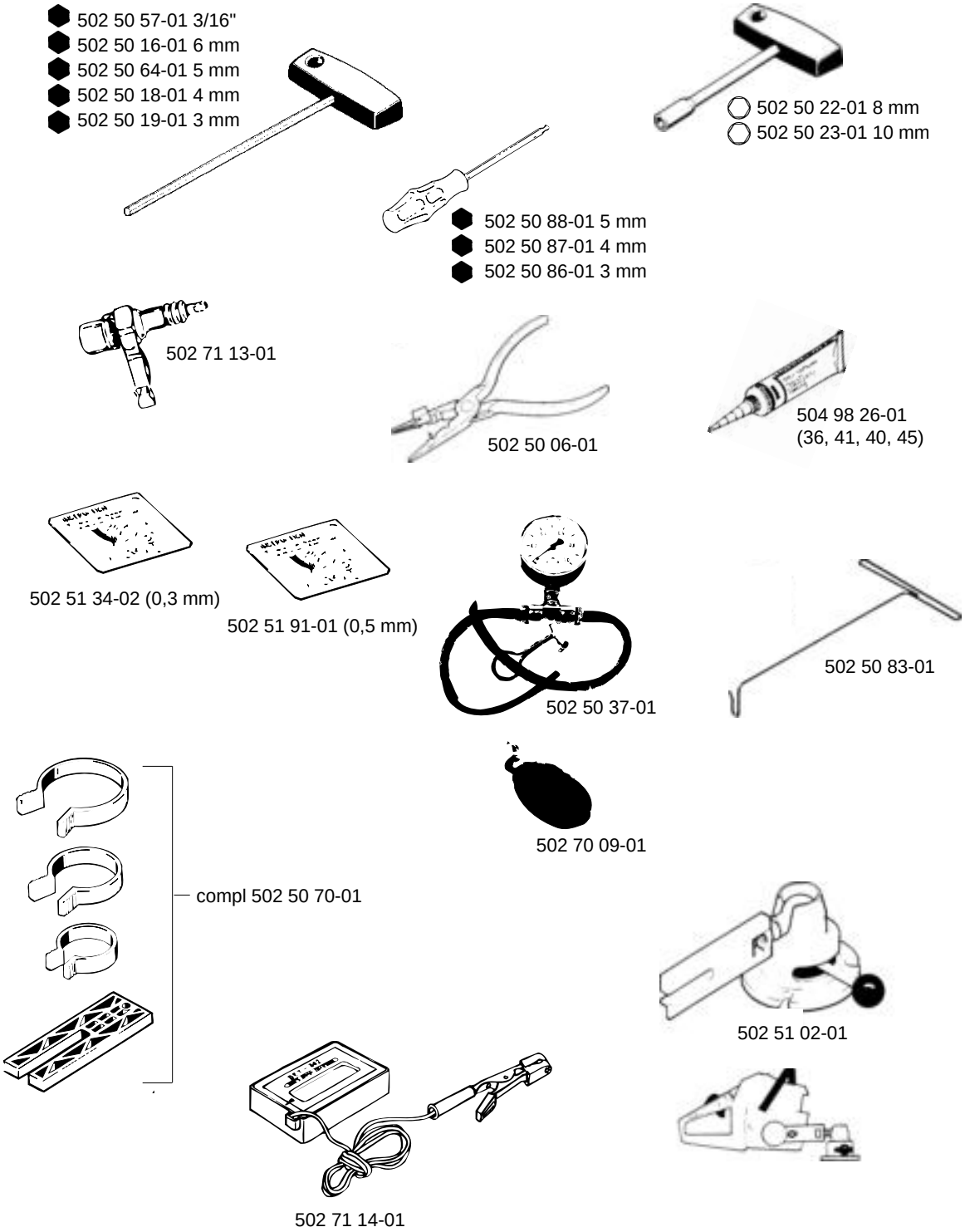

Downloaded from www.Manualslib.com manuals search engine

TOOLS

Tools for saws 36 and 41

3 mm; 4 mm; 5 mm

8 mm; 10 mm

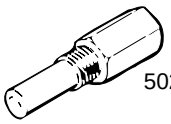

502 50 33-01

502 51 94-01

530 03 11-12

530 03 11-36

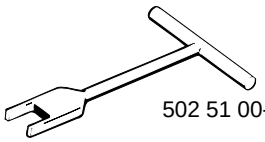

502 51 00-02

Tools for saws 40, 45, 51 and 55

4 mm

8 mm

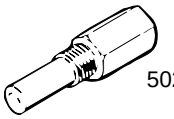

502 50 33-01

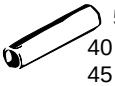

505 26 79-12
40 > 910 1116
45 > 925 1168
50 > 925 0856

502 51 94-01

502 50 99-01
(55)

502 50 26-01
(55)

505 38 18-17
(40. 45)

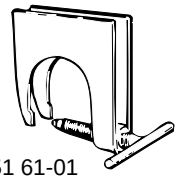

502 51 61-01
(51, 55)

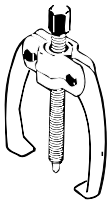

504 90 90-01

502 50 30-09
40 > 910 1116
45 > 925 1168

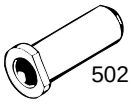

502 50 79-01 (55)

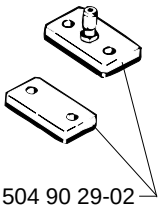

504 90 29-02

compl 502 50 38-01

502 54 03-01
(40, 45, 55)

502 50 46-01
(55)

Downloaded from www.Manualslib.com manuals search engine

TOOLS

Tools for saws 42, 242 and 246

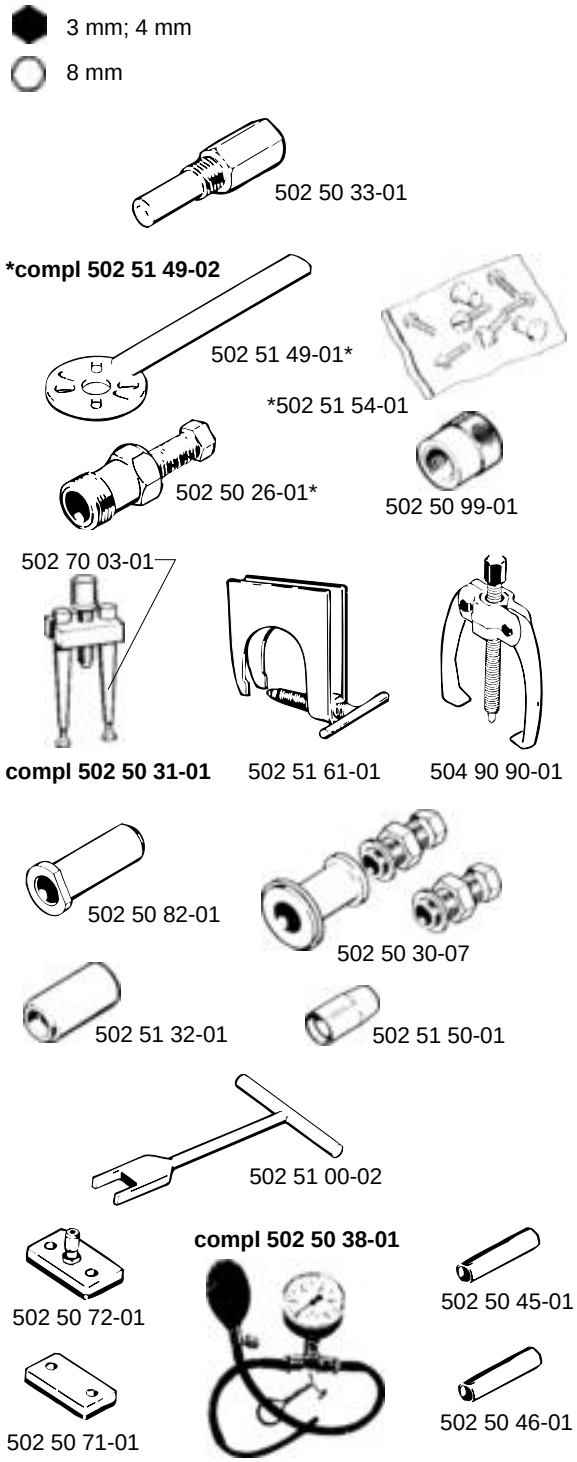

Tools for saws 254, 257 and 262

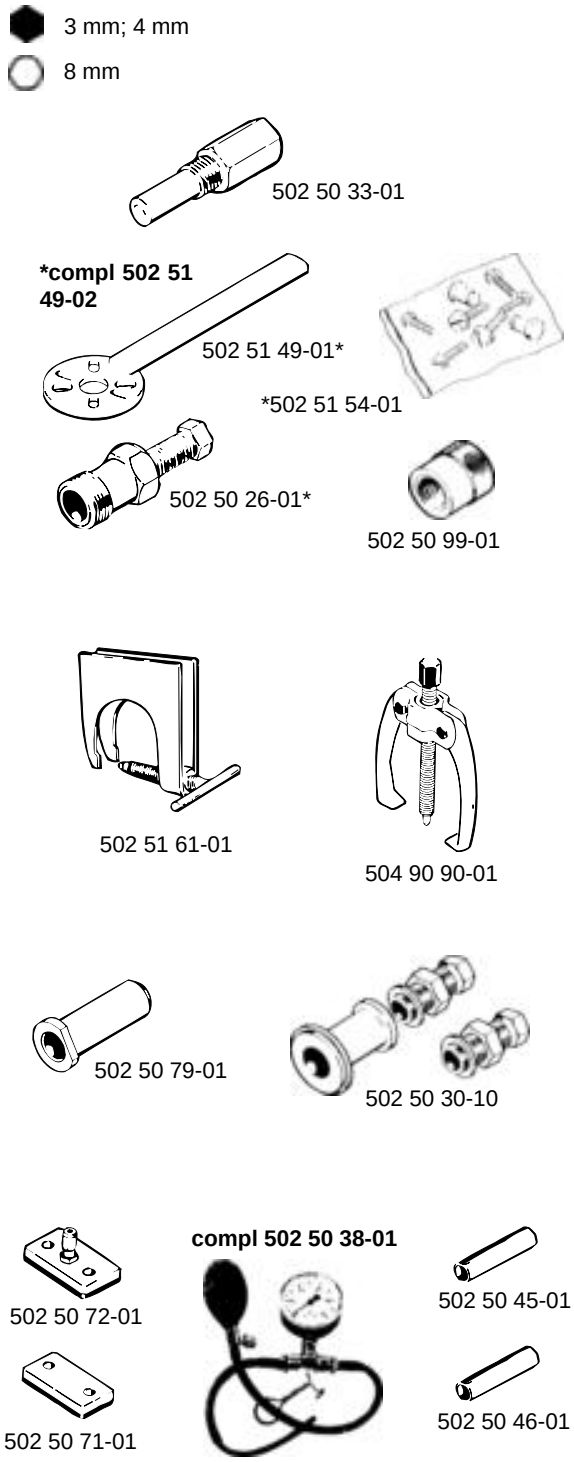

Downloaded from www.Manualslib.com manuals search engine

TOOLS

Tools for saws 61, 268 and 272

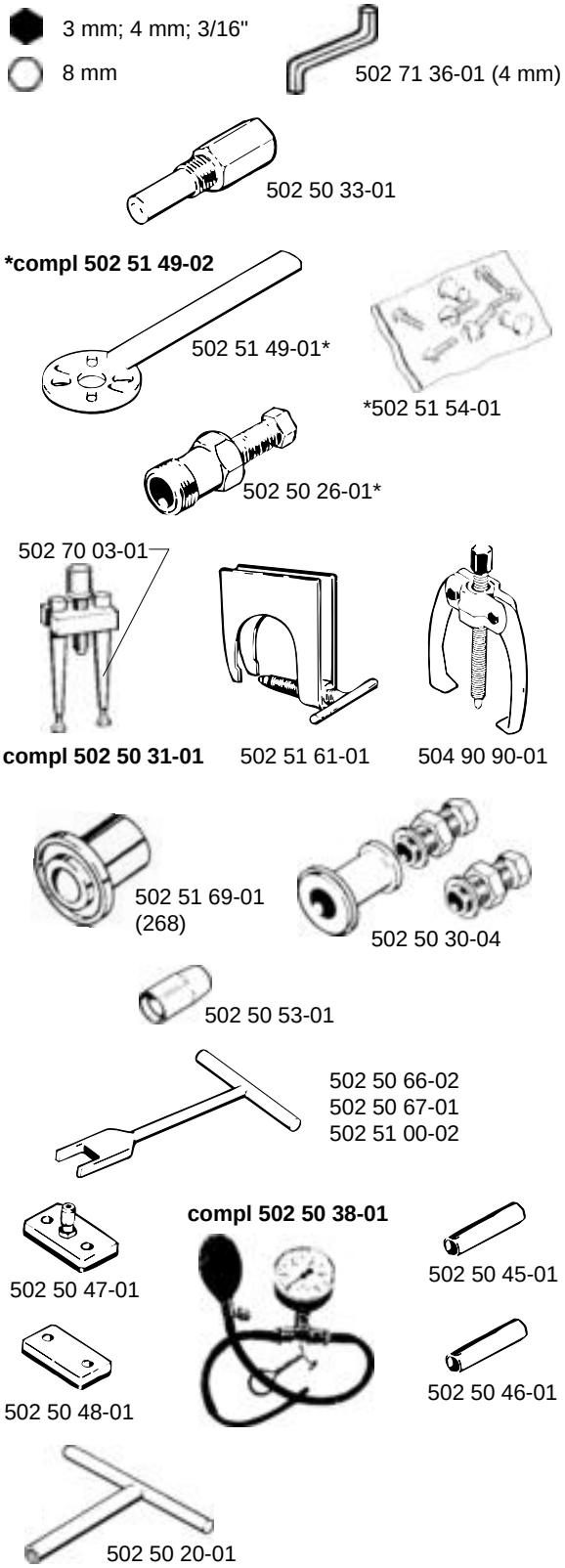

Tools for saws 281 and 288

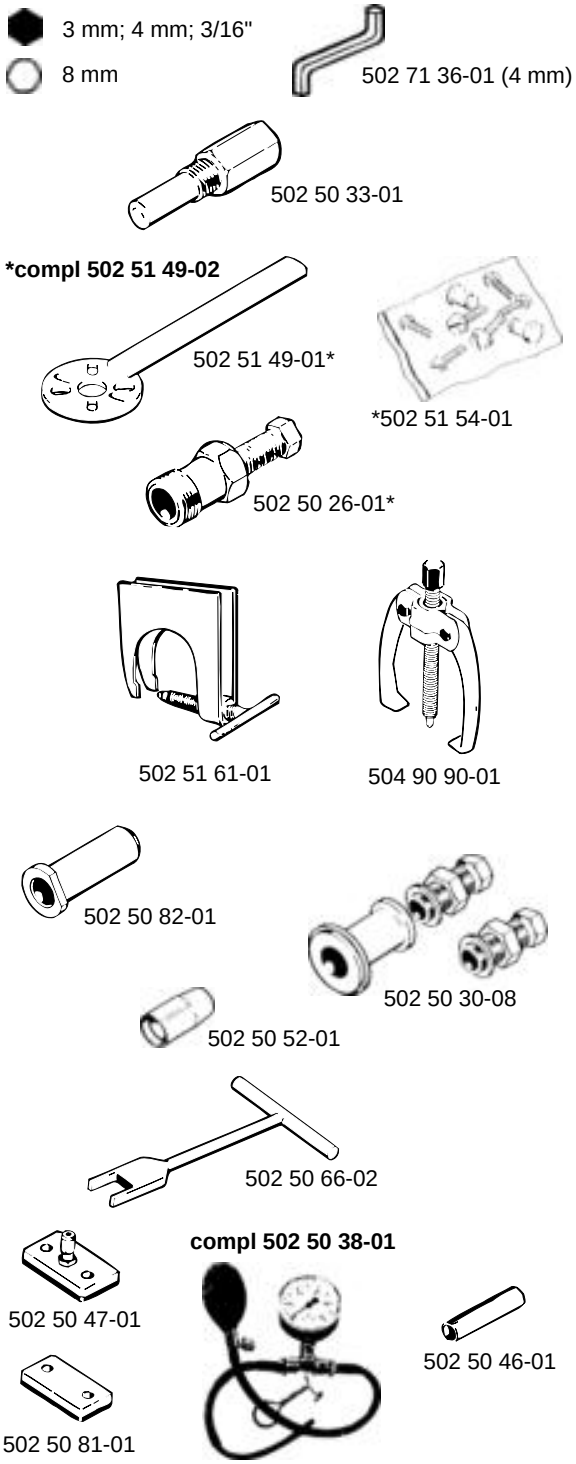

Downloaded from www.Manualslib.com manuals search engine

Tools for saws 394 and 3120

3 mm; 4 mm; 5 mm; 3/16"

8 mm; 10 mm

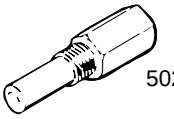

502 50 33-01

***compl 502 51 49-02**

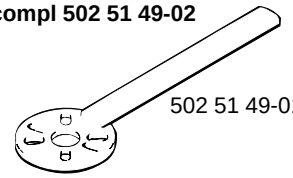

502 51 49-01*

*502 51 54-01

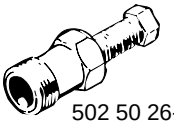

502 50 26-01*

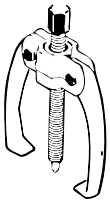

504 90 90-01

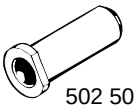

502 50 82-01

502 50 52-01

502 50 30-08

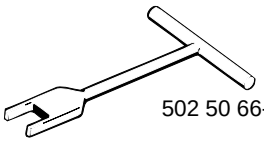

502 50 66-02

compl 502 50 38-01

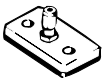

502 52 01-01 (394)
502 71 38-01 (3120)

502 52 04-01 (394)
502 71 40-01 (3120)

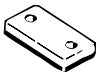

502 71 39-01 (394)

Downloaded from www.Manualslib.com manuals search engine

List of tools

Order number	Designation
502 50 06-01	Pliers
502 50 16-01	Allen key
502 50 18-01	Allen key
502 50 19-01	Allen key
502 50 20-01	Assembly tool
502 50 22-01	Socket
502 50 23-01	Socket
502 50 26-01	Puller
502 50 30-04	Assembly tool
502 50 30-08	Assembly tool
502 50 30-09	Assembly tool
502 50 30-10	Assembly tool
502 50 31-01	Puller
502 50 33-01	Piston stop
502 50 37-01	Vacuum gauge
502 50 38-01	Pressure gauge
502 50 45-01	Extended socket
502 50 46-01	Extended socket
502 50 47-01	Cover plate
502 50 48-01	Cover plate
502 50 52-01	Assembly socket
502 50 57-01	Allen key
502 50 64-01	Allen key
502 50 66-02	U-key
502 50 67-01	U-key
502 50 70-01	Assembly tool, piston
502 50 71-01	Cover plate
502 50 72-01	Cover plate
502 50 79-01	Assembly mandrel
502 50 81-01	Cover plate
502 50 82-01	Assembly mandrel
502 50 83-01	Hook, tank valve
502 50 86-01	Allen key
502 50 87-01	Allen key
502 50 88-01	Allen key
502 50 99-01	Puller sleeve
502 51 00-02	U-key
502 51 02-01	Assembly fixture
502 51 32-01	Assembly sleeve
502 51 34-02	Feeler gauge

Order number	Designation
502 51 49-01	Puller
502 51 49-02	Puller
502 51 50-01	Socket
502 51 54-01	Bolt set
502 51 61-01	Dismantling tool, crankcase
502 51 69-01	Assembly mandrel
502 51 69-01	Feeler gauges
502 51 94-01	Assembly mandrel
502 52 01-01	Cover plate
502 52 04-01	Spacer
502 54 03-01	Spacer
502 70 09-01	Pump blower
502 71 13-01	Test spark plug
502 71 14-01	Tachometer
502 71 36-01	Allen key
502 71 38-01	Cover plate
502 71 39-01	Cover plate
502 71 40-01	Spacer
504 90 29-02	Cover plate
504 90 90-01	Puller
504 98 26-01	Silicone rubber
505 26 79-12	Assembly mandrel
505 38 18-17	Puller

Downloaded from www.Manualslib.com manuals search engine

Saws 36 and 41

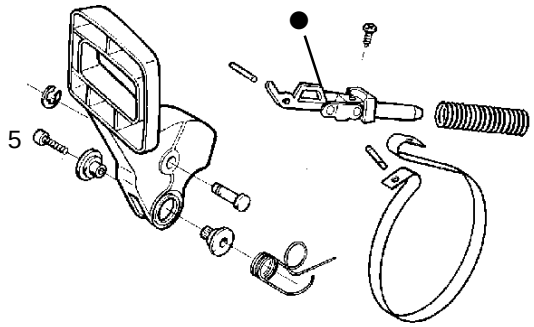

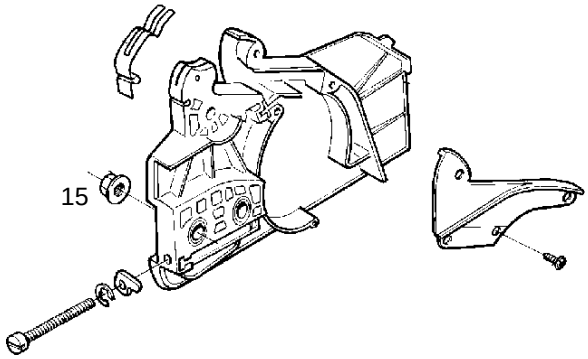

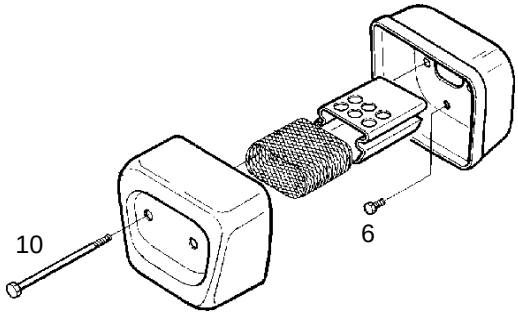

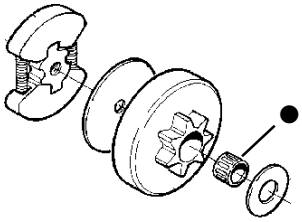

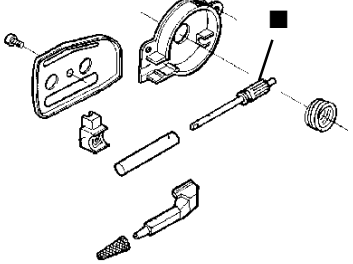

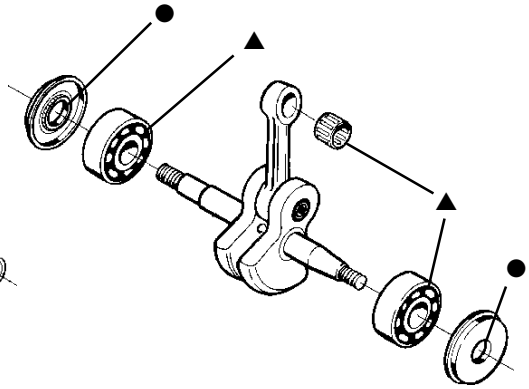

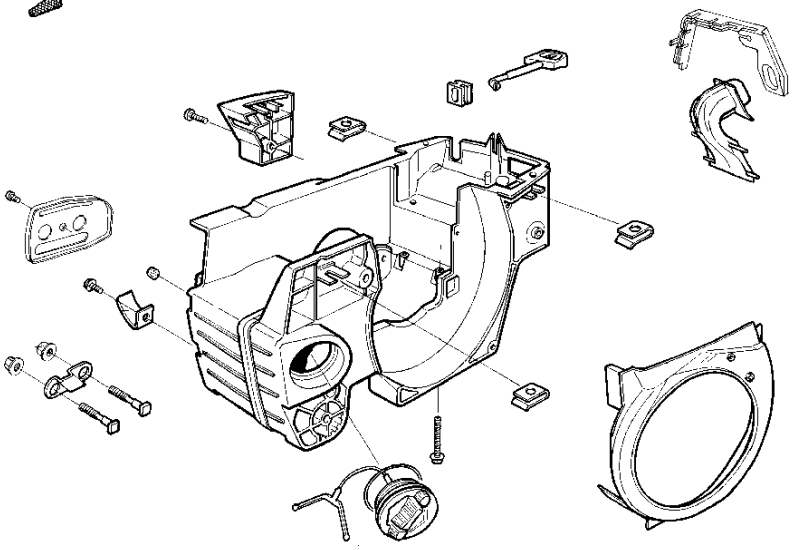

Character key

Numbers by components that are bolted refer to the tightening torque in Nm.

▲ = Lubricate using two-stroke oil.
■ = Lubricate using saw chain oil.
● = Lubricate using grease.
= Locking fluid (Loctite).

Downloaded from www.Manualslib.com manuals search engine

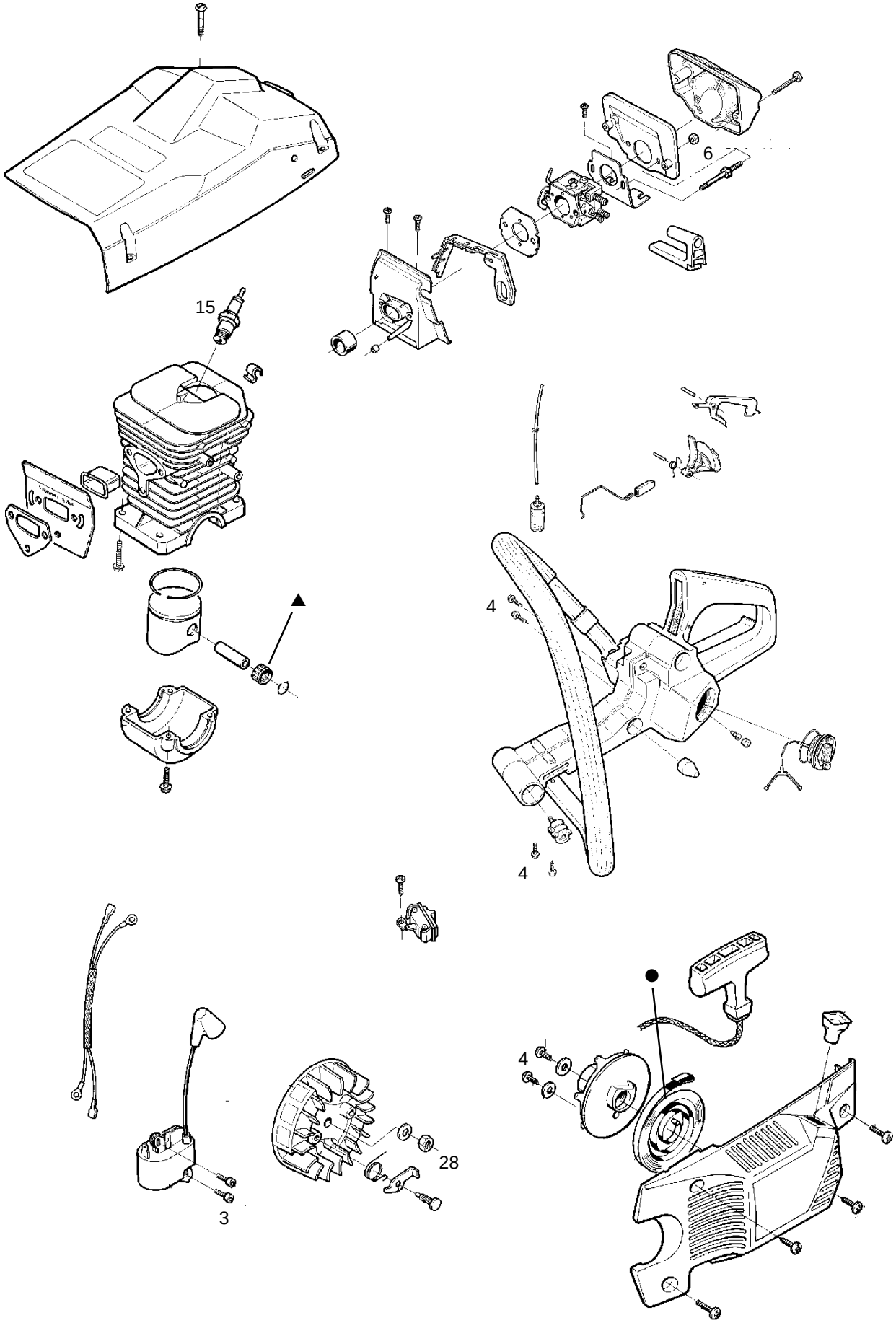

Downloaded from www.Manualslib.com manuals search engine

Saws 42, 242 and 246

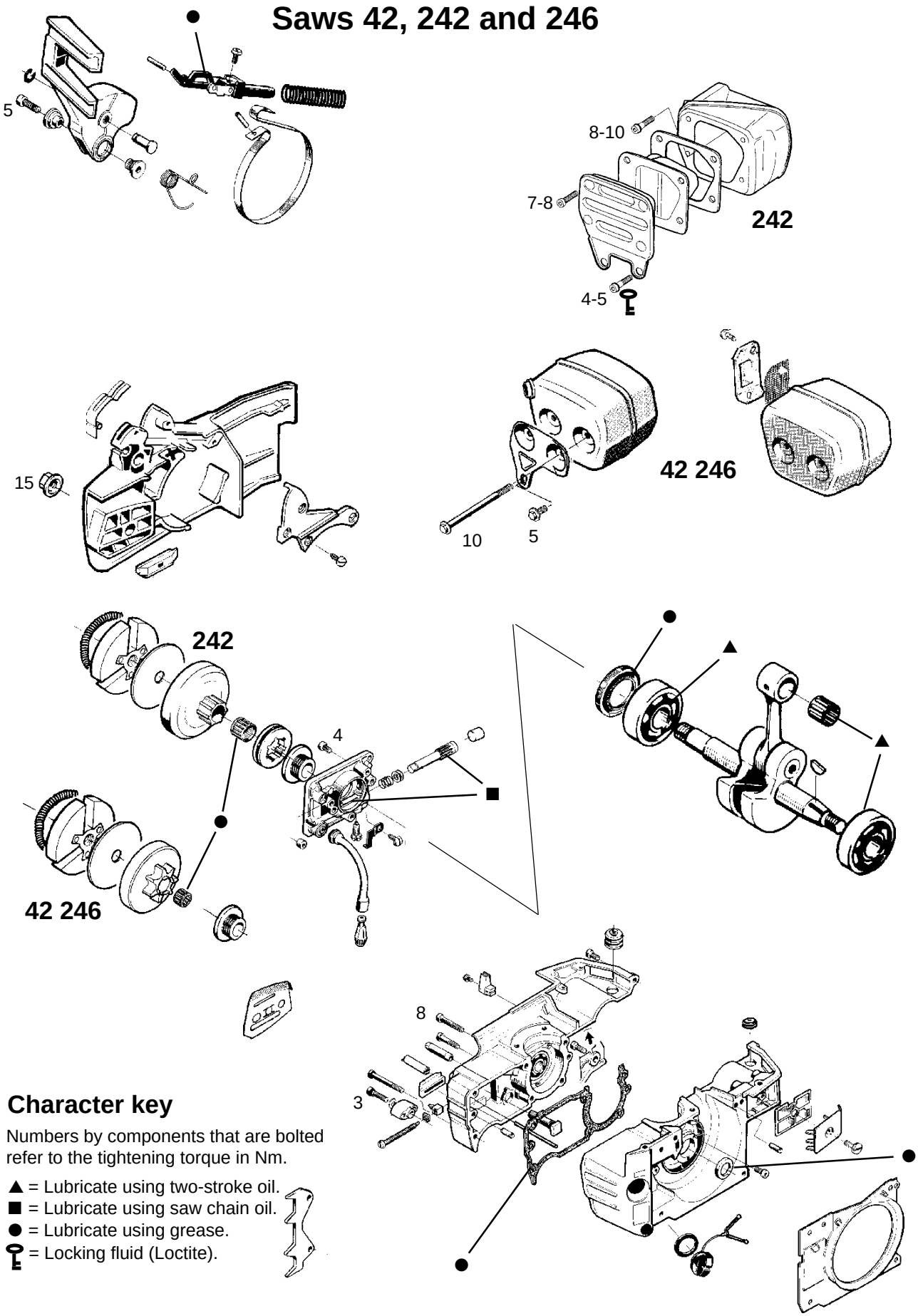

Character key

Numbers by components that are bolted refer to the tightening torque in Nm.

▲ = Lubricate using two-stroke oil.
■ = Lubricate using saw chain oil.
● = Lubricate using grease.
= Locking fluid (Loctite).

Downloaded from www.Manualslib.com manuals search engine

Downloaded from www.Manualslib.com manuals search engine

Saws 40 and 45

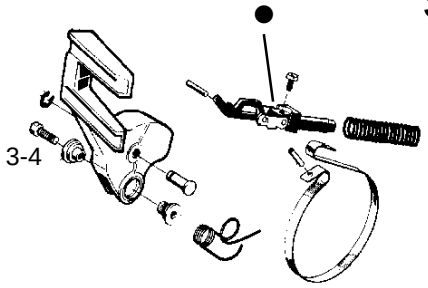

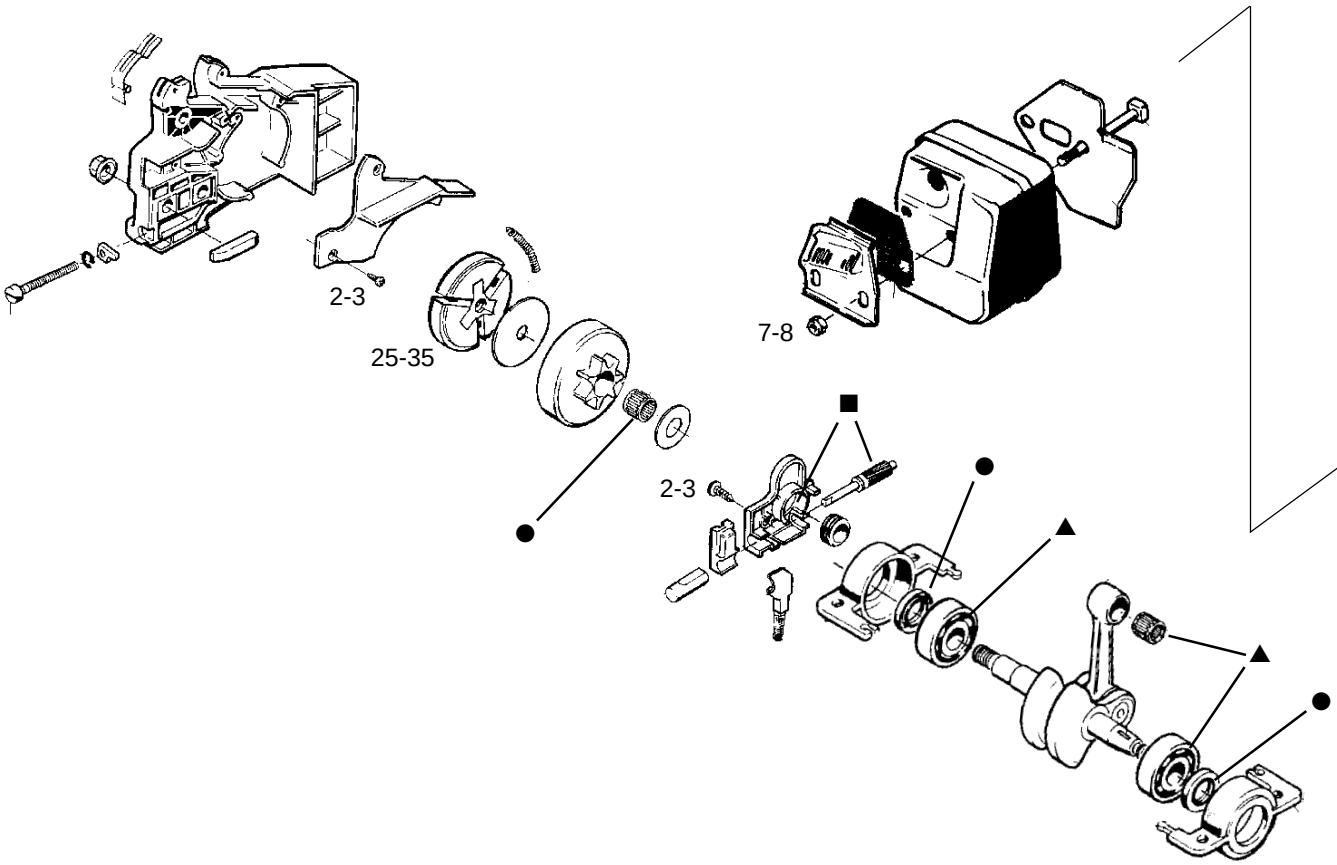

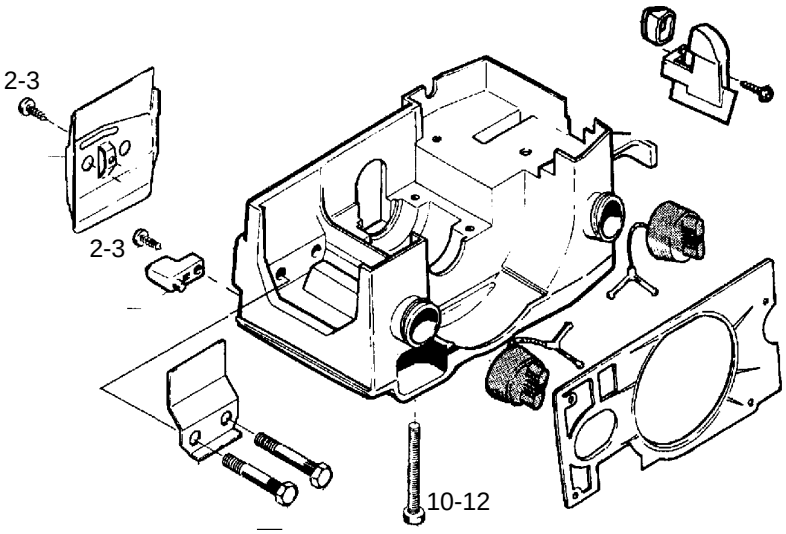

Character key

Numbers by components that are bolted refer to the tightening torque in Nm.

▲ = Lubricate using two-stroke oil.
■ = Lubricate using saw chain oil.
● = Lubricate using grease.
= Locking fluid (Loctite).

Downloaded from www.Manualslib.com manuals search engine

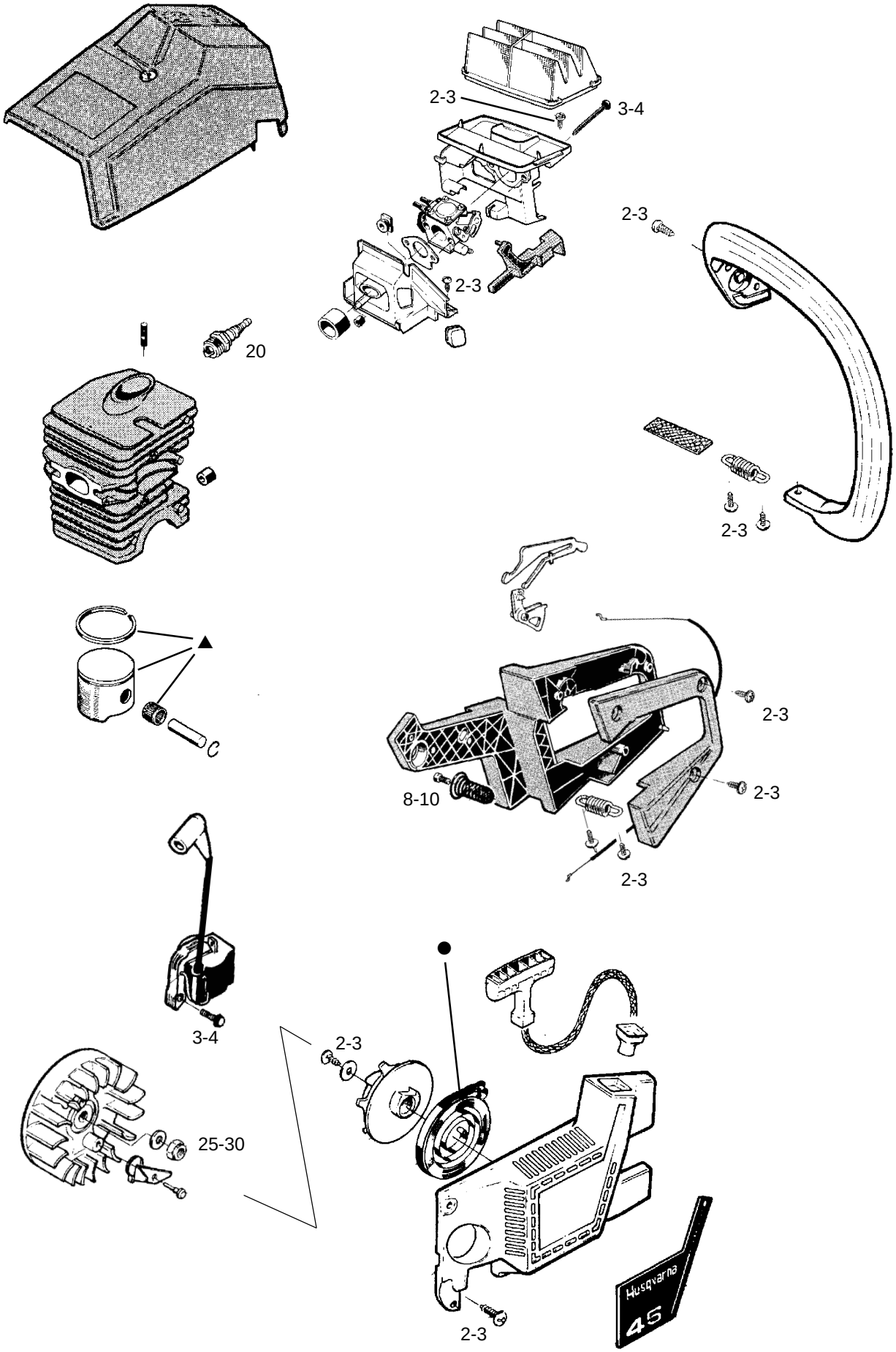

Downloaded from www.Manualslib.com manuals search engine

Saws 51 and 55

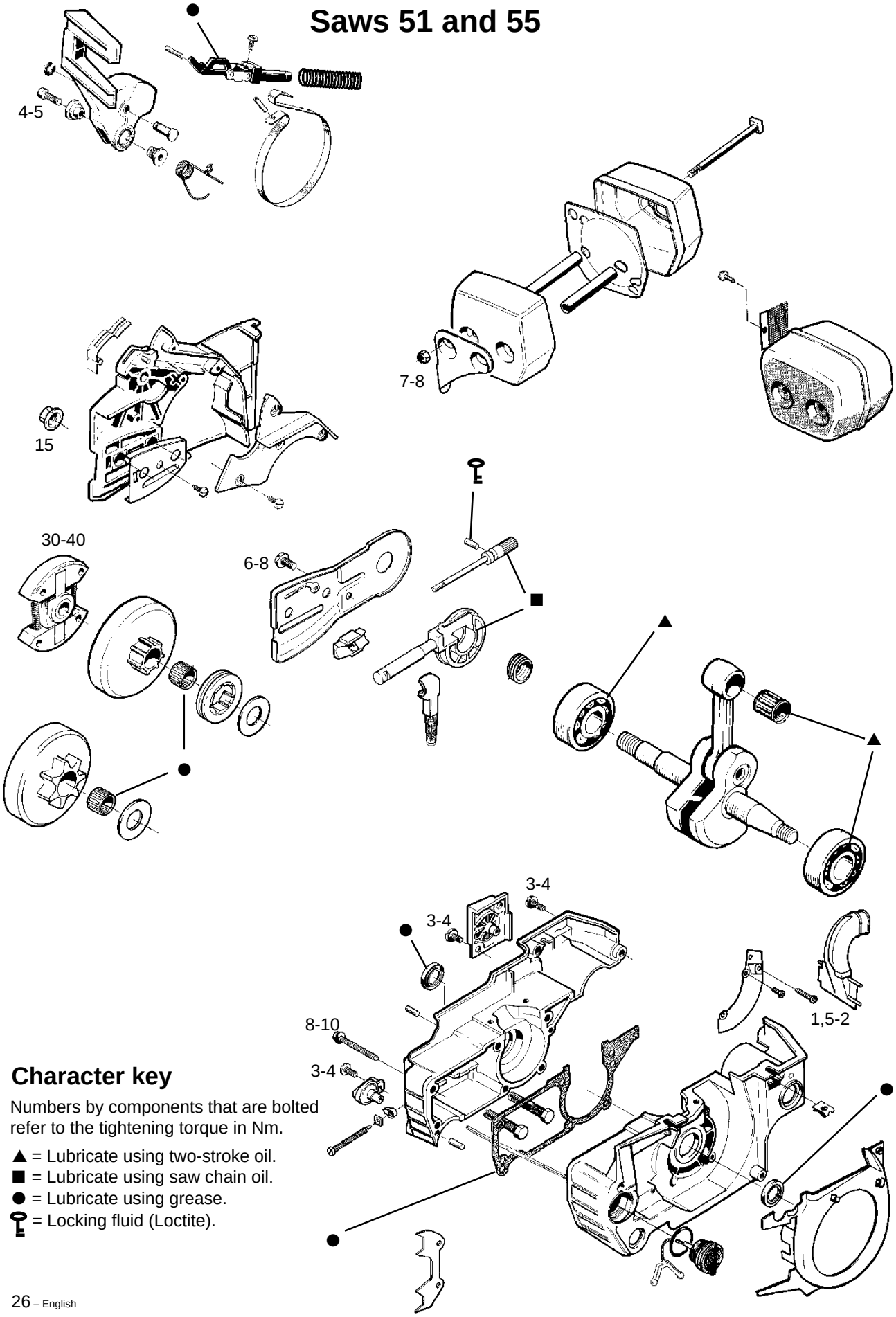

Character key

Numbers by components that are bolted refer to the tightening torque in Nm.

▲ = Lubricate using two-stroke oil.
■ = Lubricate using saw chain oil.
● = Lubricate using grease.
= Locking fluid (Loctite).

Downloaded from www.Manualslib.com manuals search engine

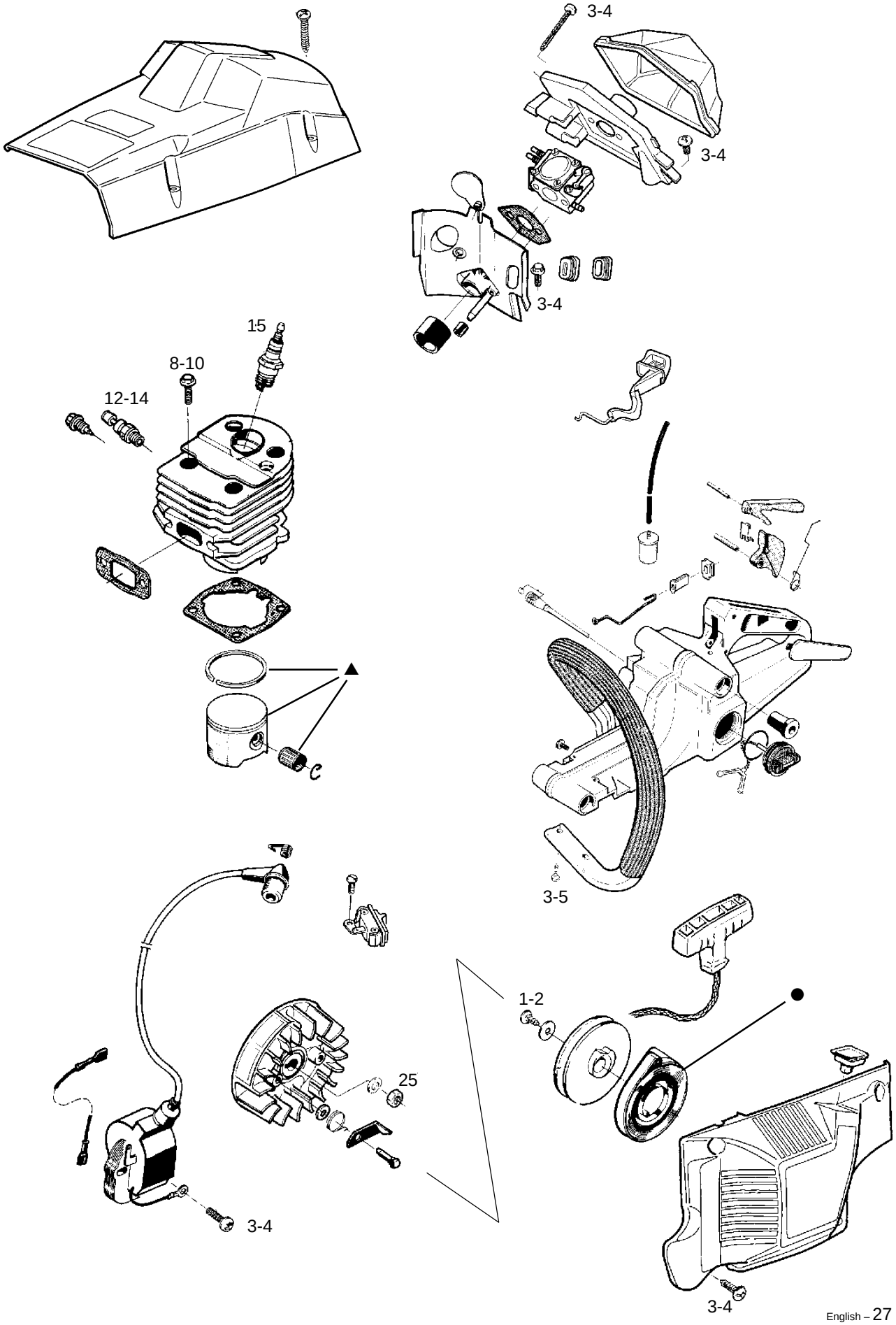

Downloaded from www.Manualslib.com manuals search engine

Saws 254 and 257

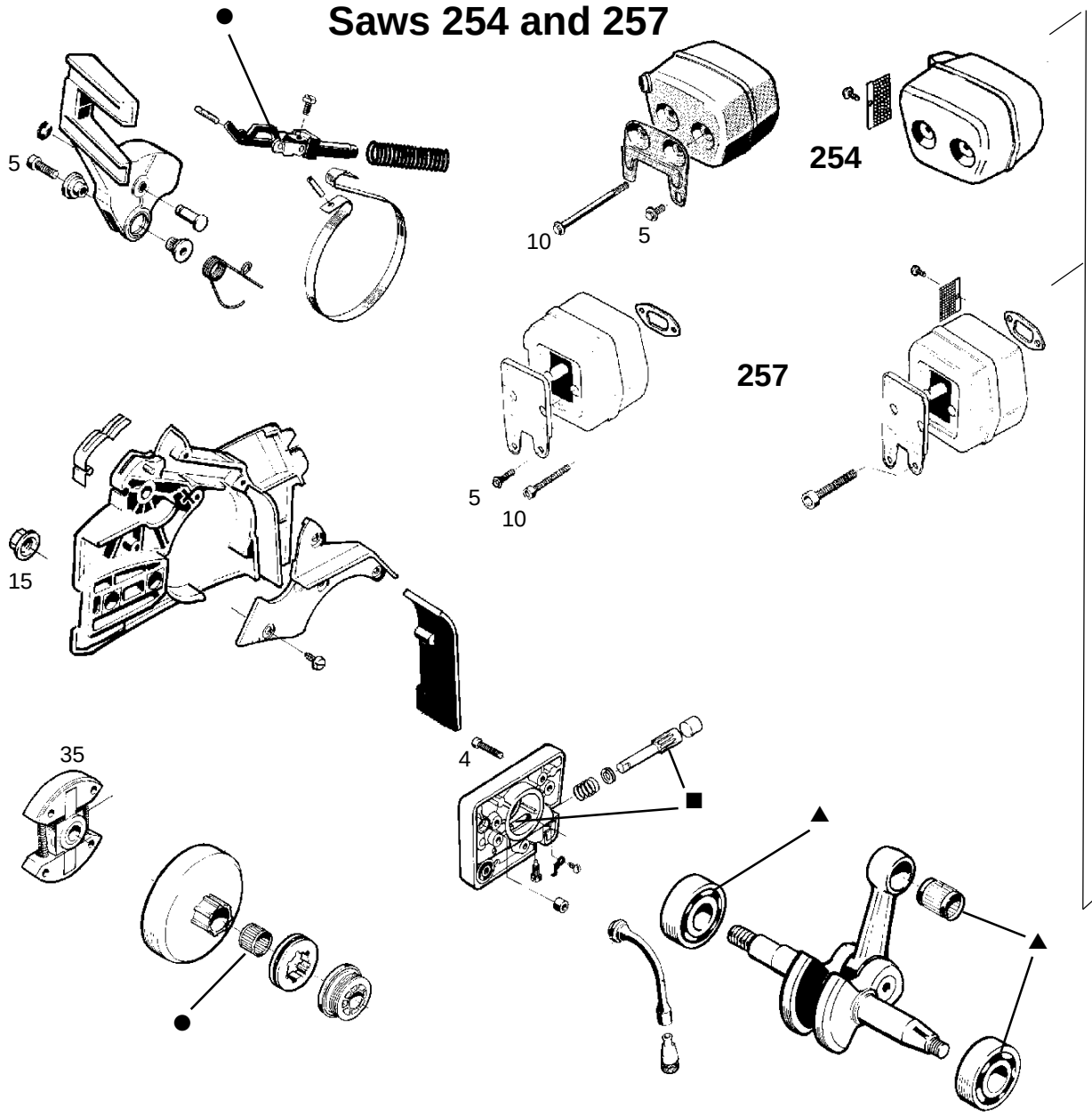

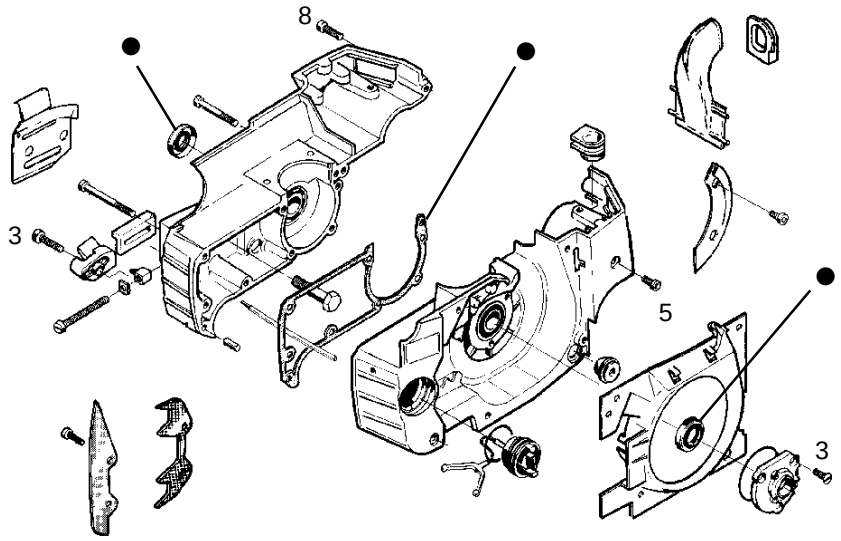

Character key

Numbers by components that are bolted refer to the tightening torque in Nm.

▲ = Lubricate using two-stroke oil.
■ = Lubricate using saw chain oil.
● = Lubricate using grease.
= Locking fluid (Loctite).

Downloaded from www.Manualslib.com manuals search engine

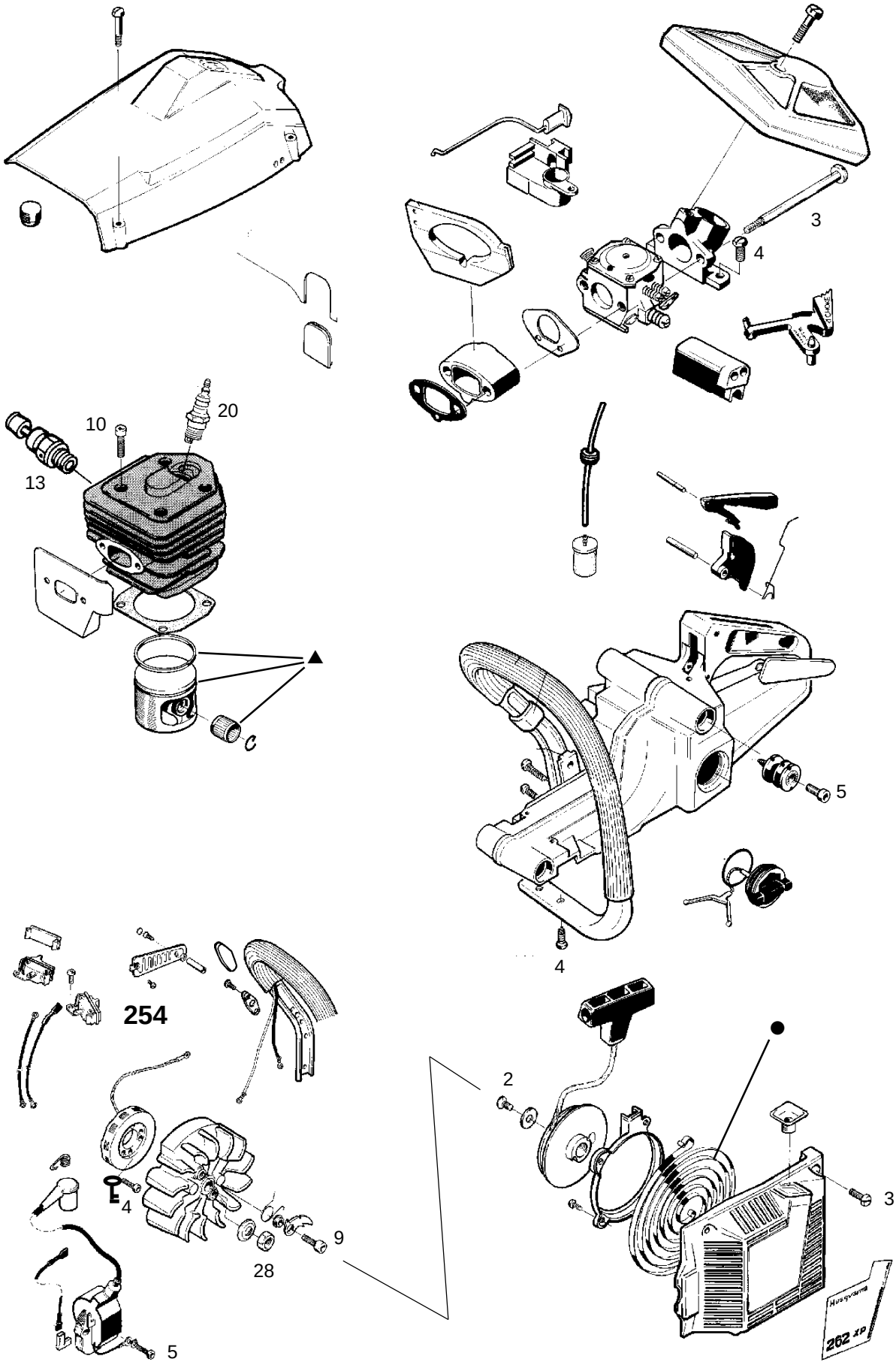

Downloaded from www.Manualslib.com manuals search engine

Saw 262

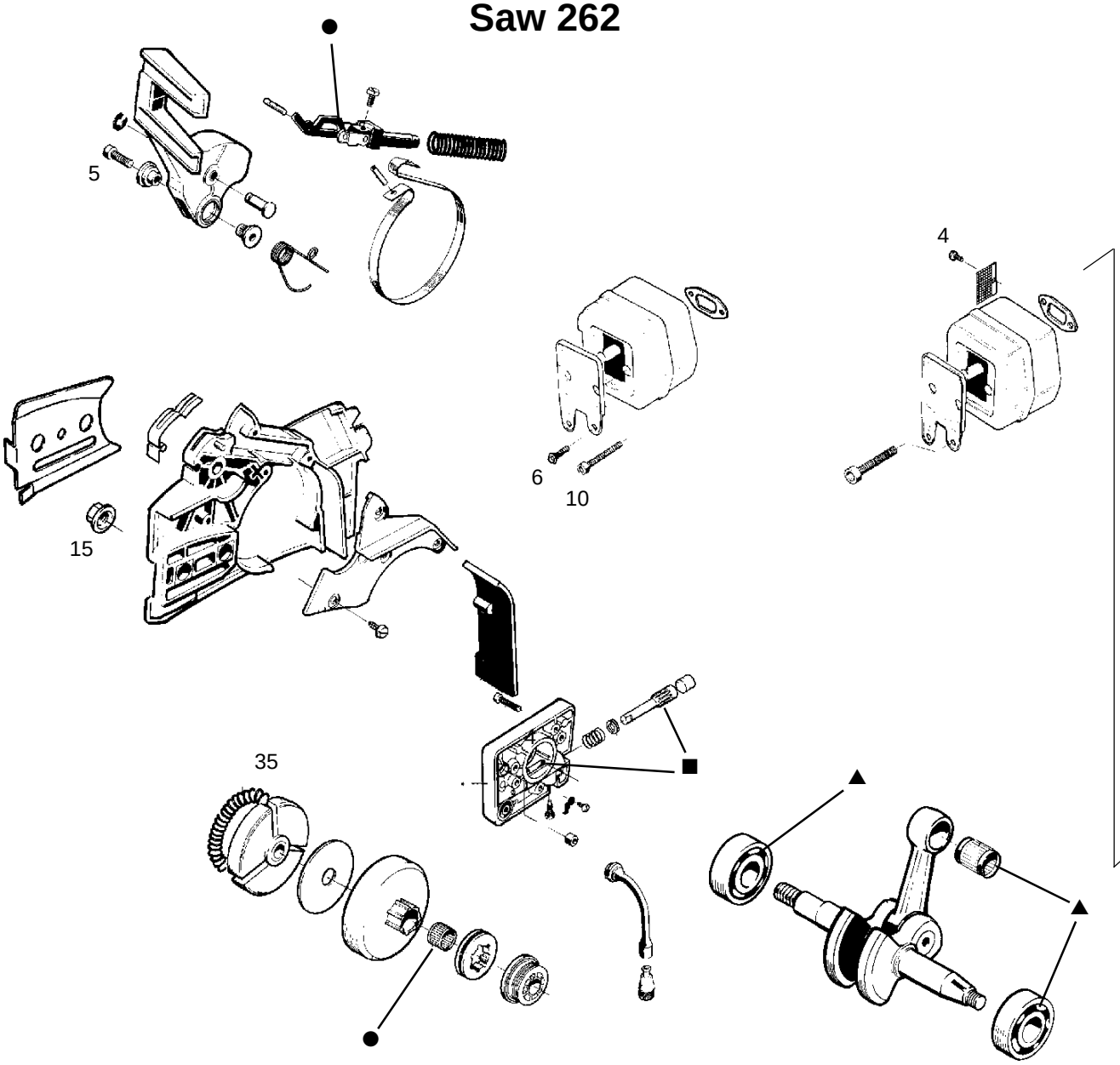

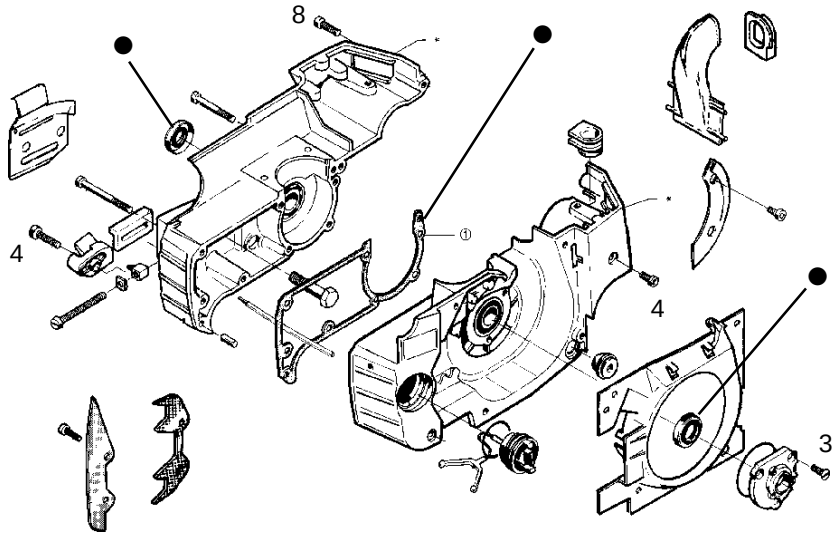

Character key

Numbers by components that are bolted refer to the tightening torque in Nm.

▲ = Lubricate using two-stroke oil.
■ = Lubricate using saw chain oil.
● = Lubricate using grease.
= Locking fluid (Loctite).

Downloaded from www.Manualslib.com manuals search engine

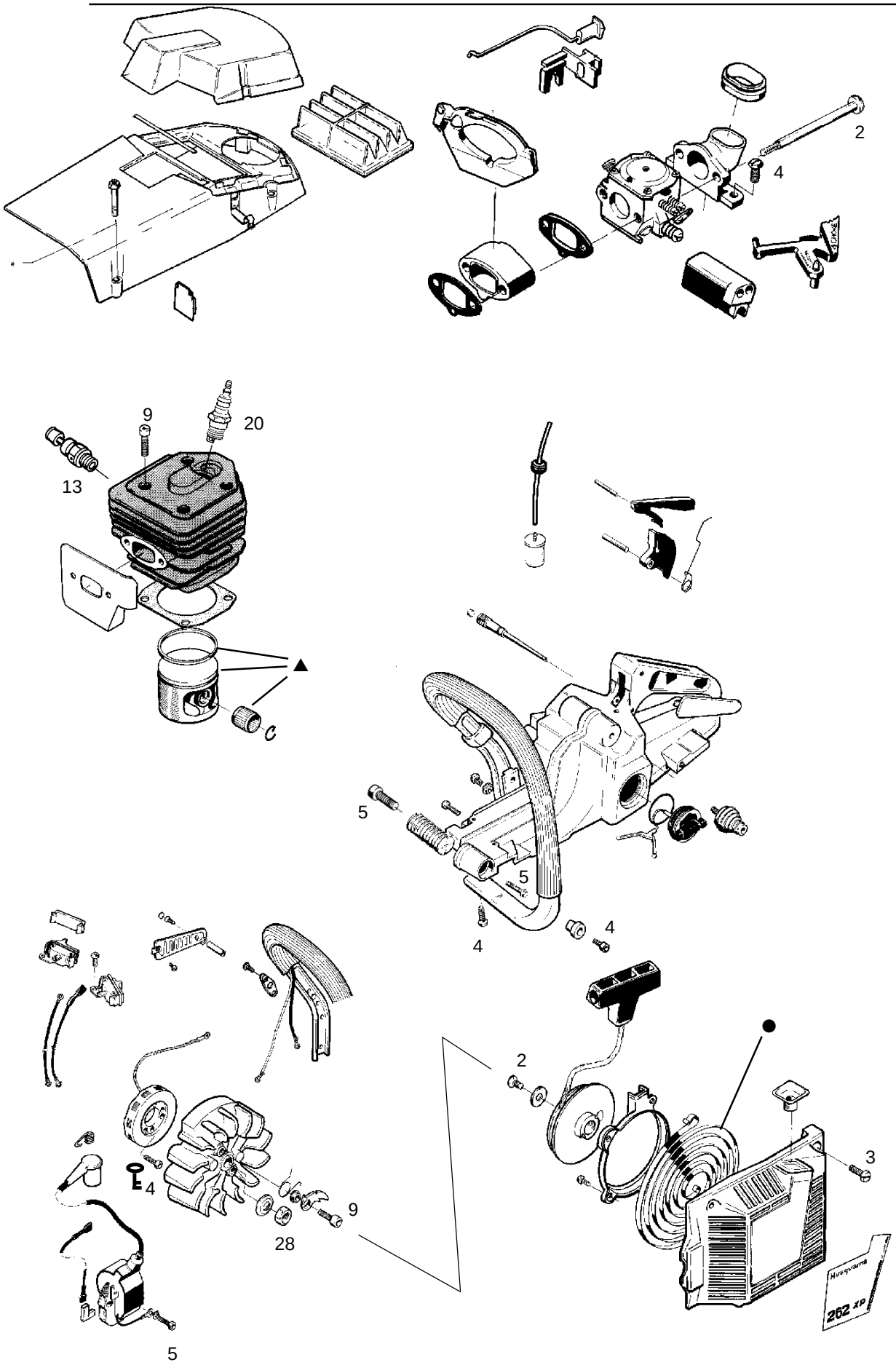

Downloaded from www.Manualslib.com manuals search engine

Saws 61, 268 and 272

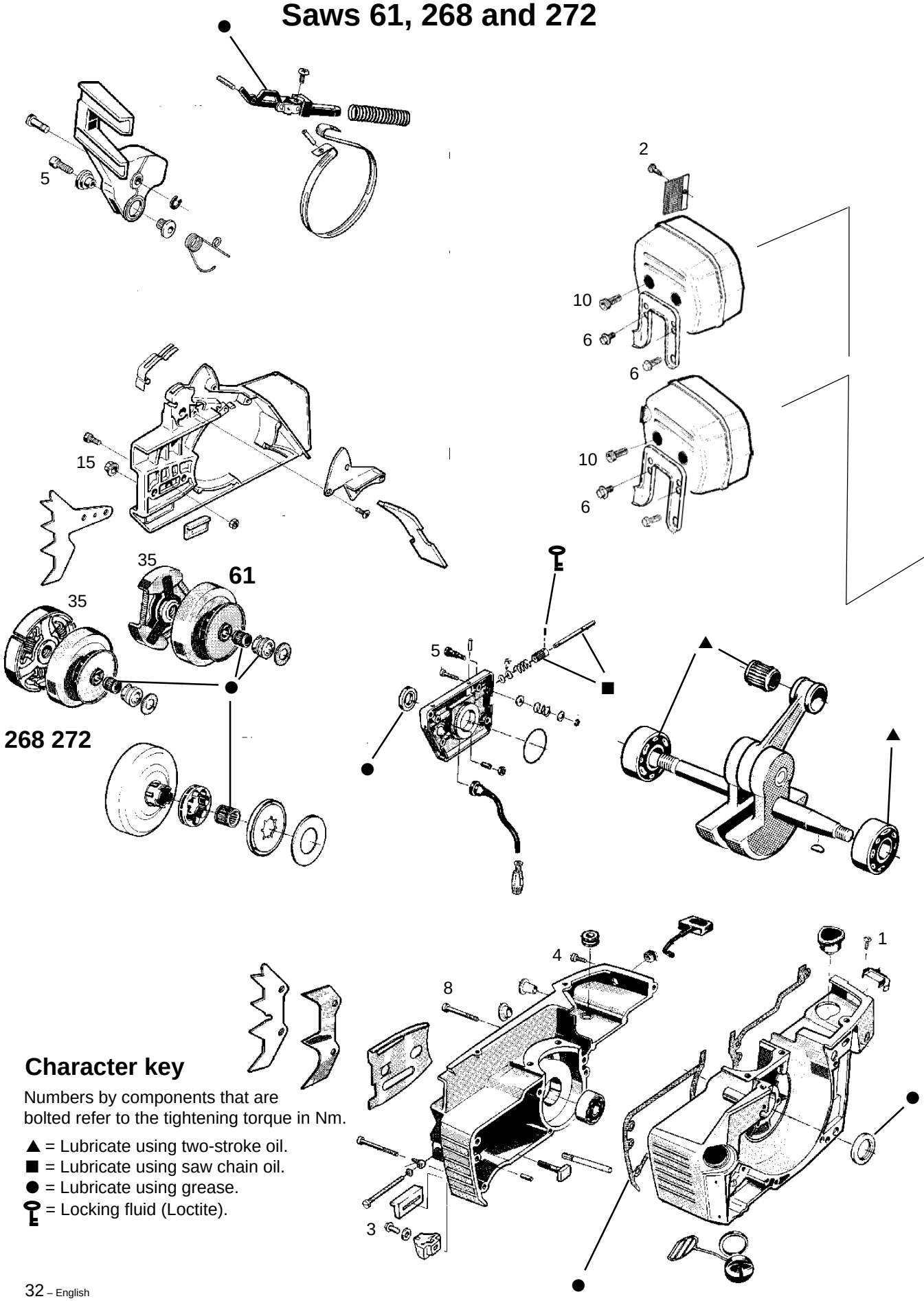

Character key

Numbers by components that are bolted refer to the tightening torque in Nm.

▲ = Lubricate using two-stroke oil.
■ = Lubricate using saw chain oil.
● = Lubricate using grease.
🔑 = Locking fluid (Loctite).

Downloaded from www.Manualslib.com manuals search engine

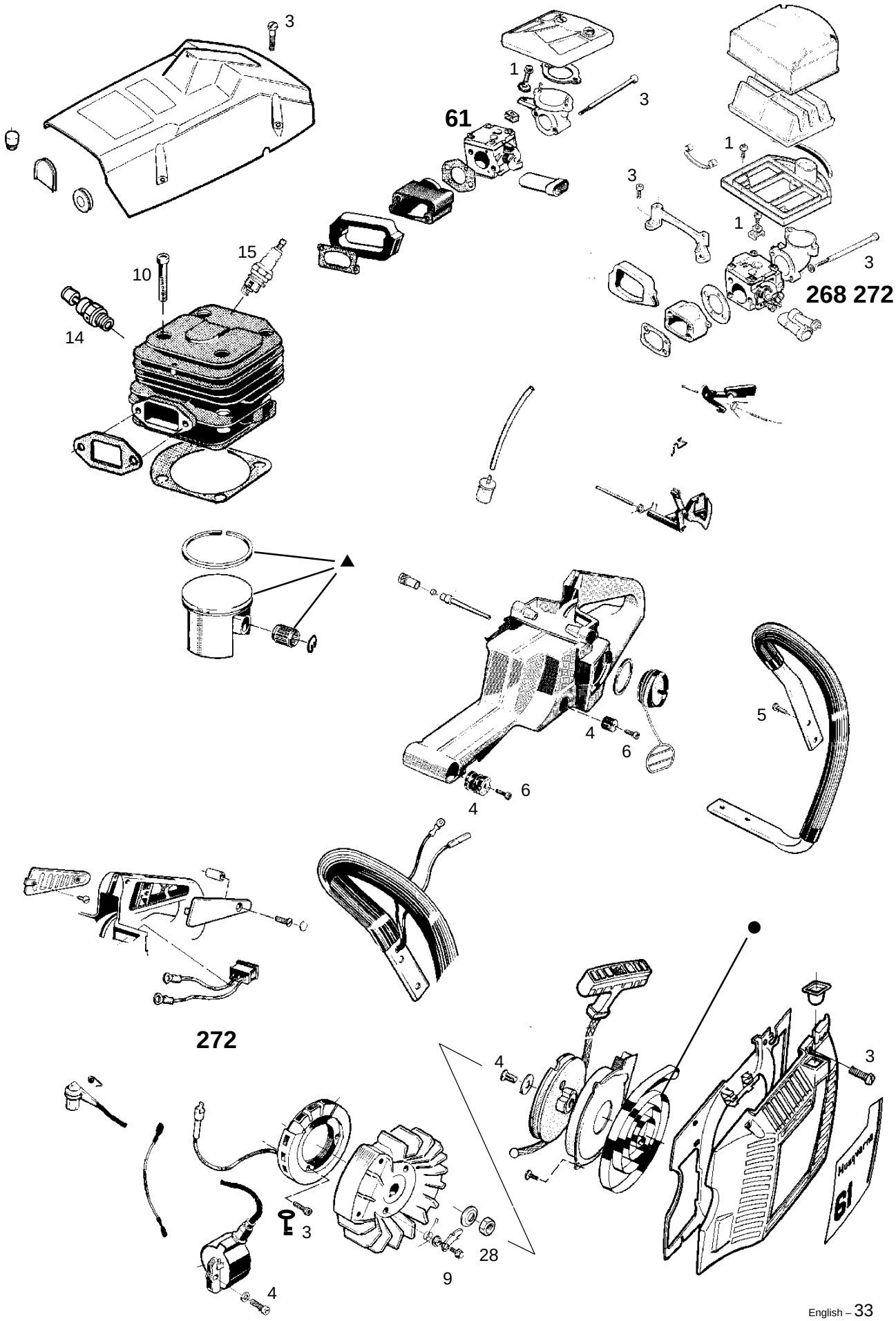

Downloaded from www.Manualslib.com manuals search engine

Saws 281 and 288

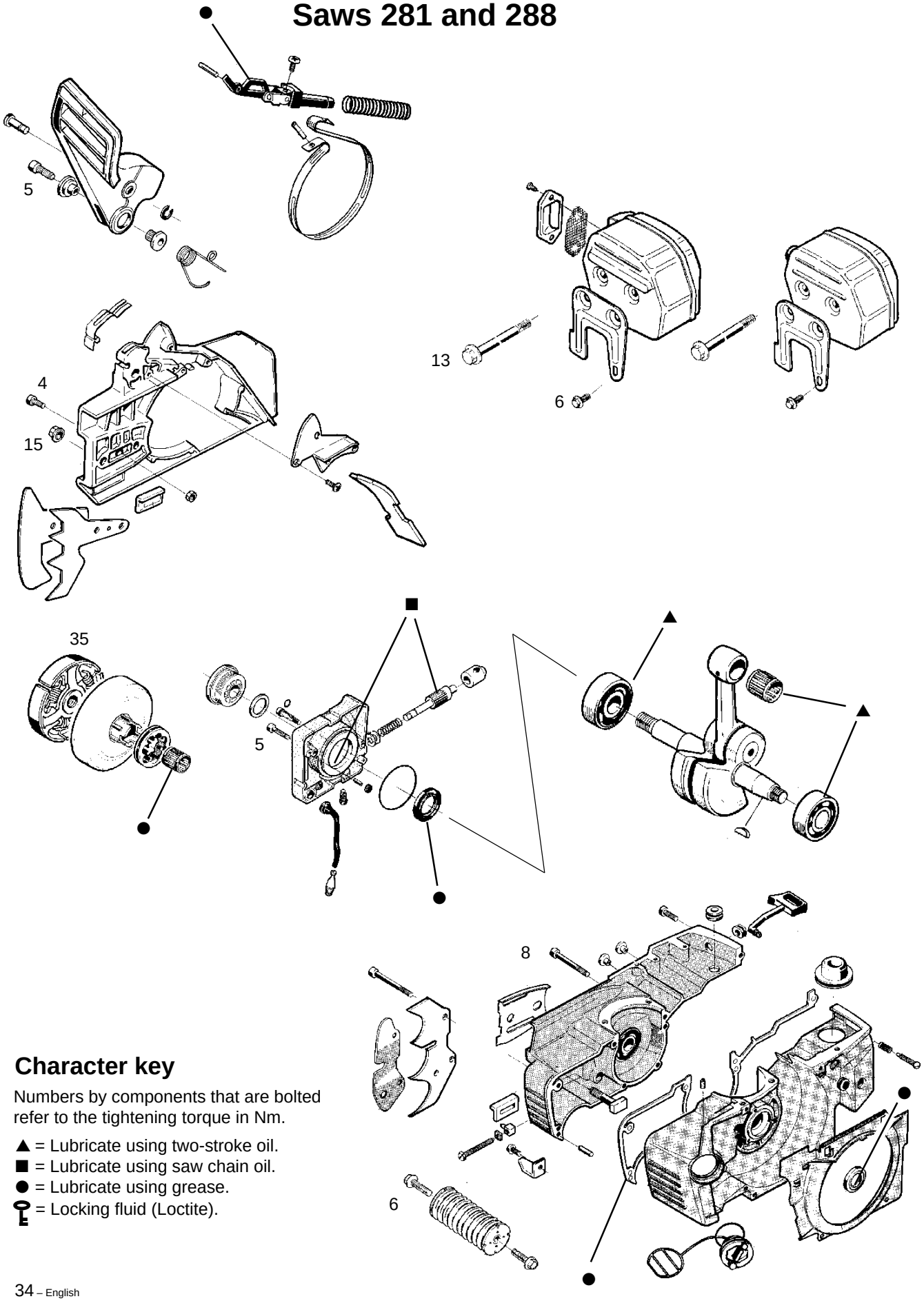

Character key

Numbers by components that are bolted refer to the tightening torque in Nm.

▲ = Lubricate using two-stroke oil.
■ = Lubricate using saw chain oil.
● = Lubricate using grease.
= Locking fluid (Loctite).

Downloaded from www.Manualslib.com manuals search engine

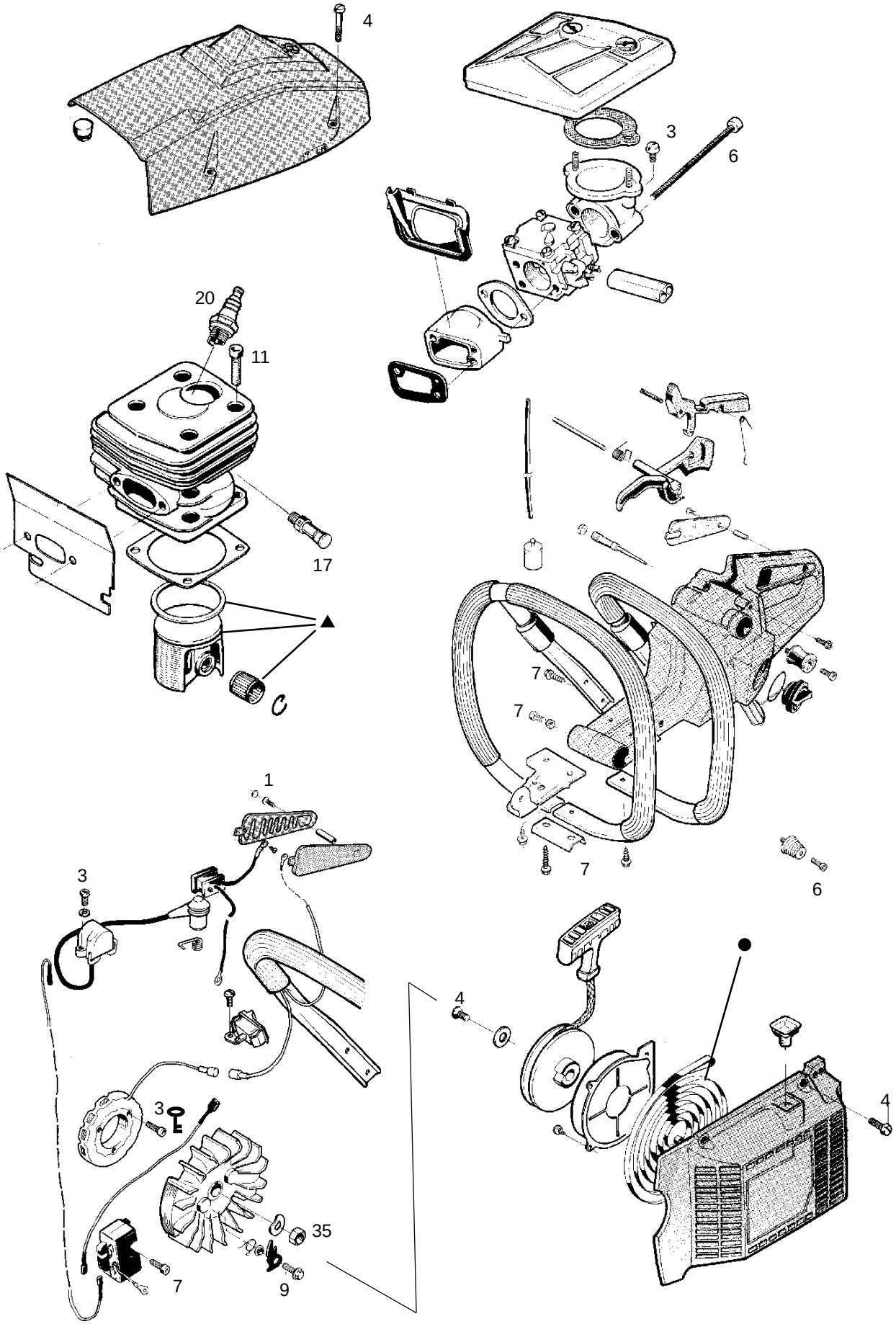

Downloaded from www.Manualslib.com manuals search engine

Saw 394

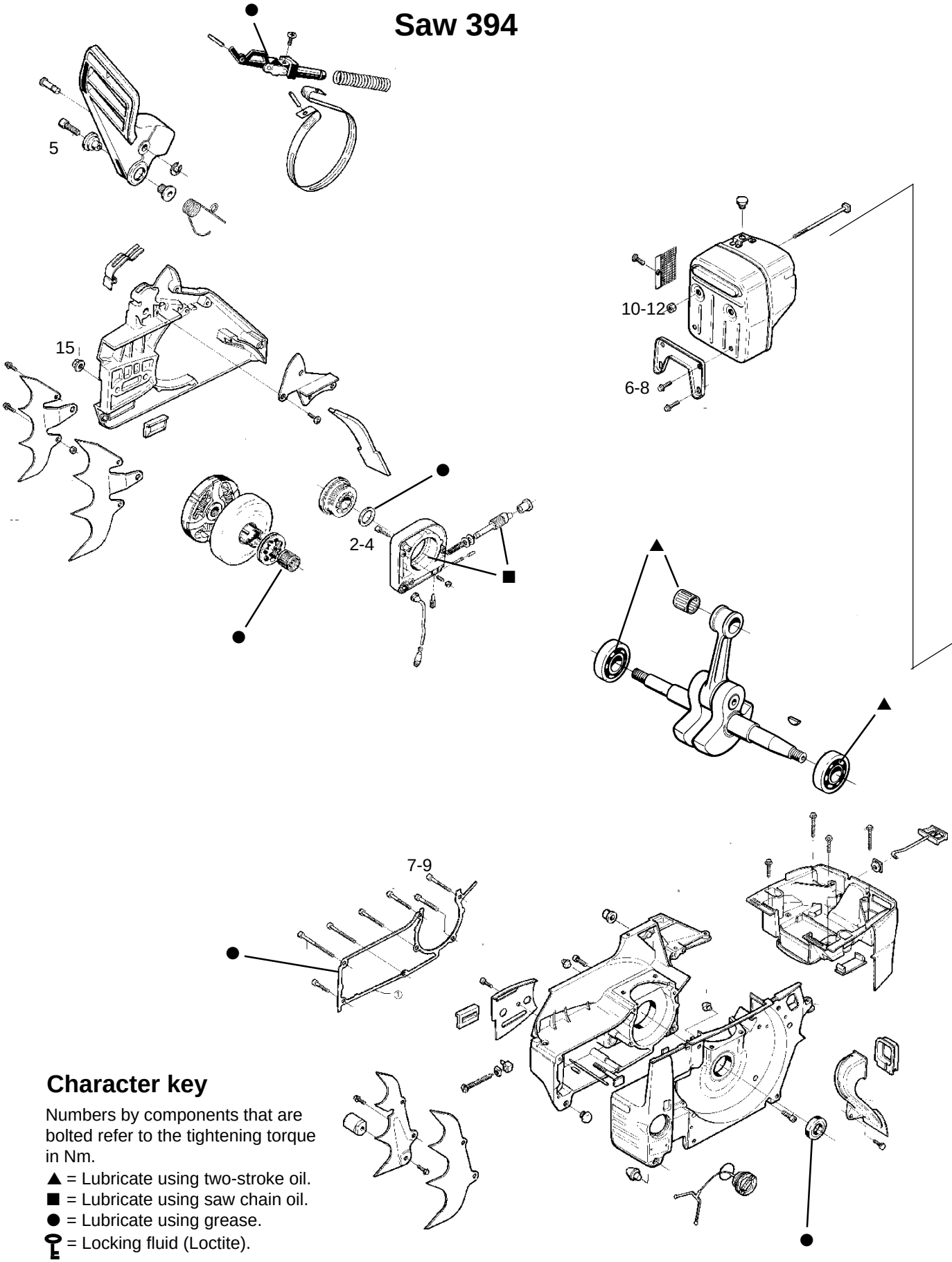

Character key

Numbers by components that are bolted refer to the tightening torque in Nm.

▲ = Lubricate using two-stroke oil.
■ = Lubricate using saw chain oil.
● = Lubricate using grease.
= Locking fluid (Loctite).

Downloaded from www.Manualslib.com manuals search engine

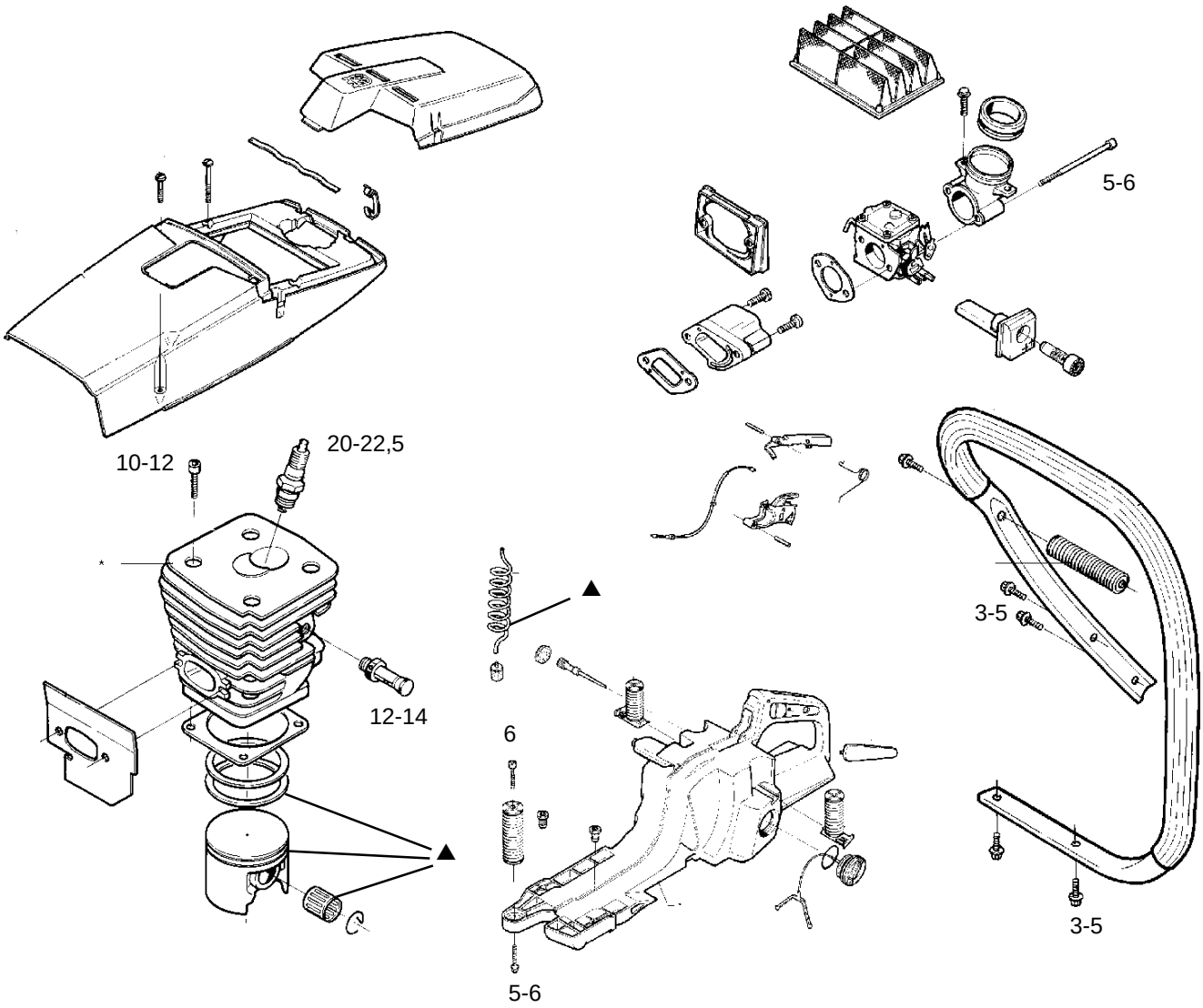

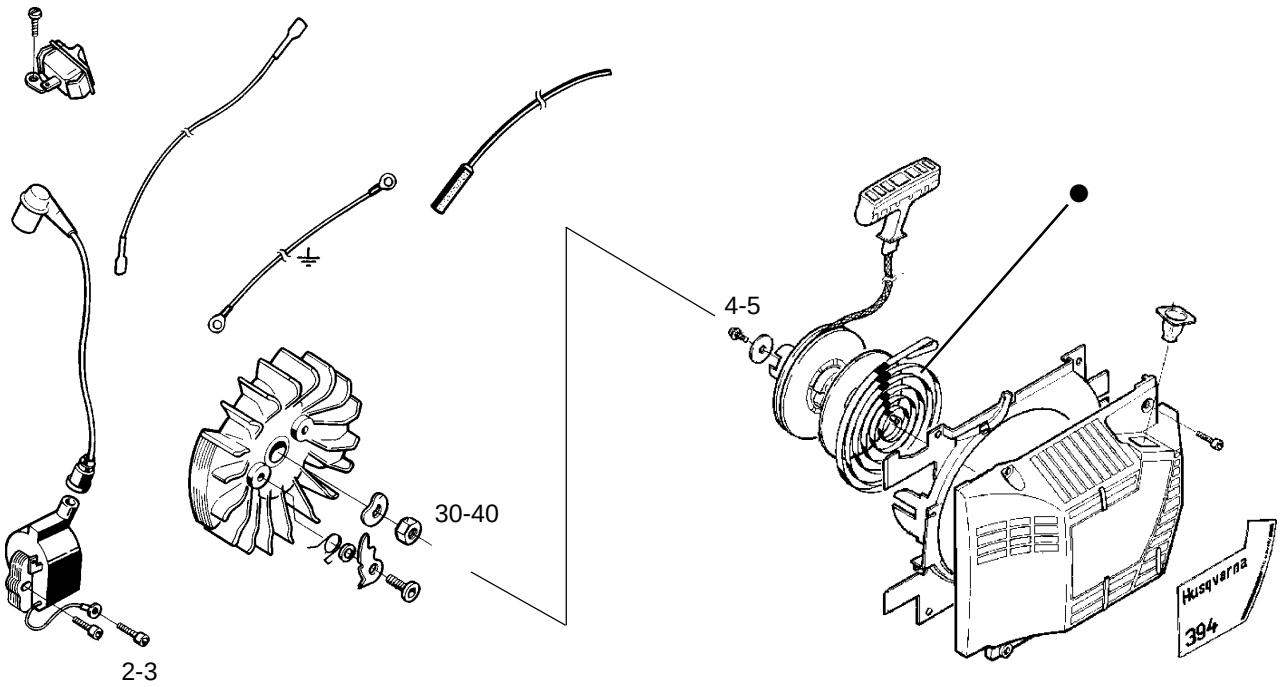

Downloaded from www.Manualslib.com manuals search engine

Saw 3120

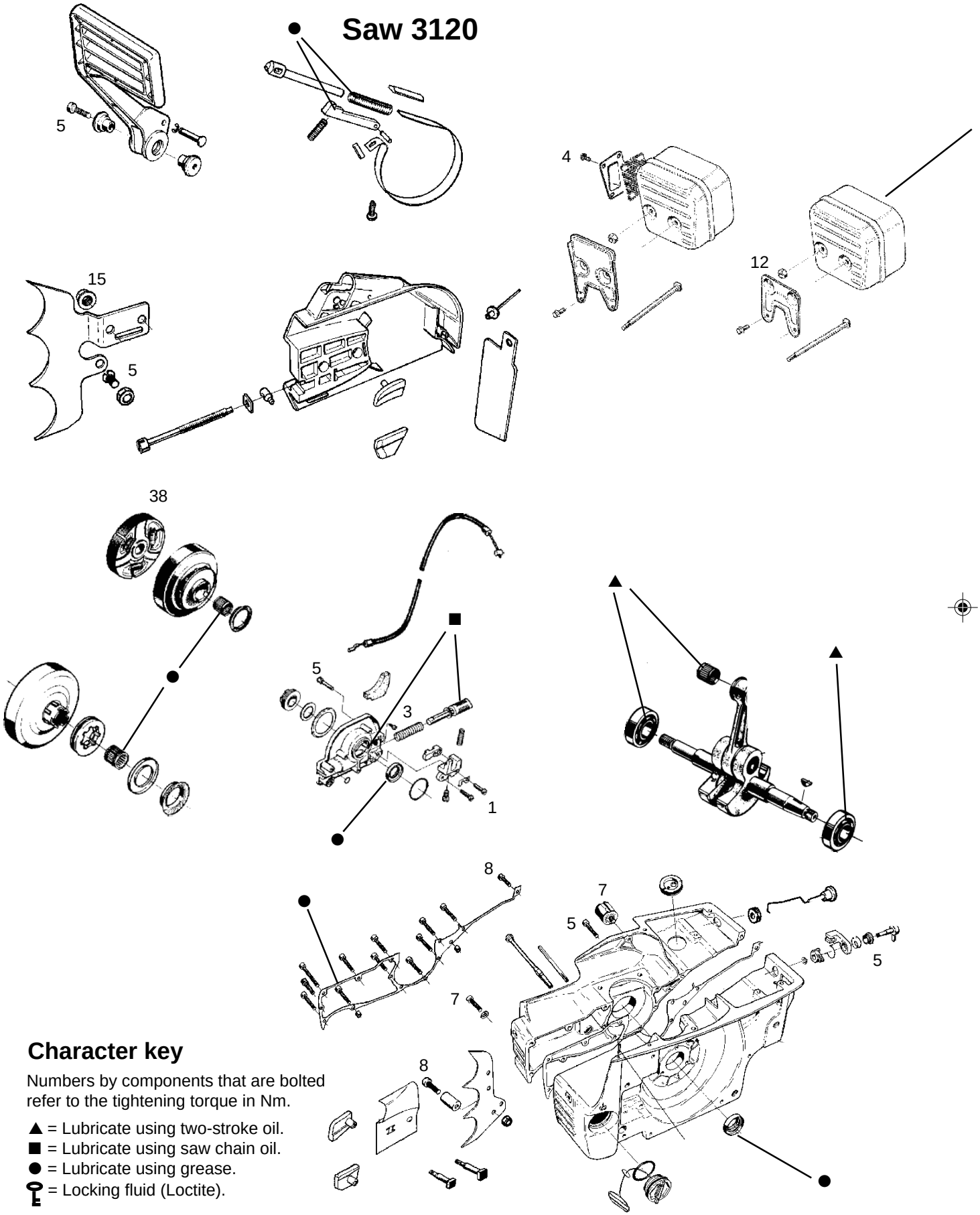

Character key

Numbers by components that are bolted refer to the tightening torque in Nm.

▲ = Lubricate using two-stroke oil.
■ = Lubricate using saw chain oil.
● = Lubricate using grease.
= Locking fluid (Loctite).

Downloaded from www.Manualslib.com manuals search engine

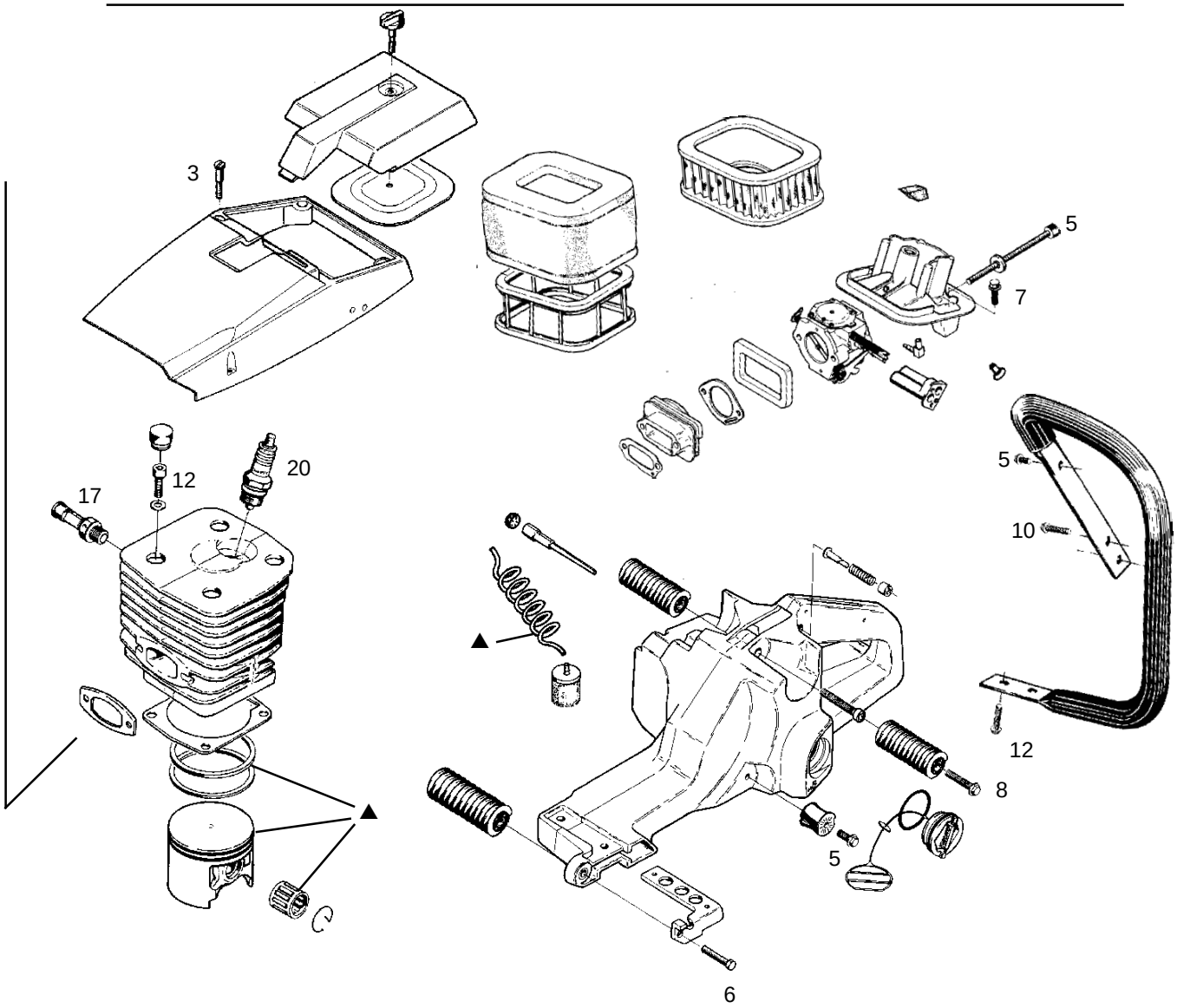

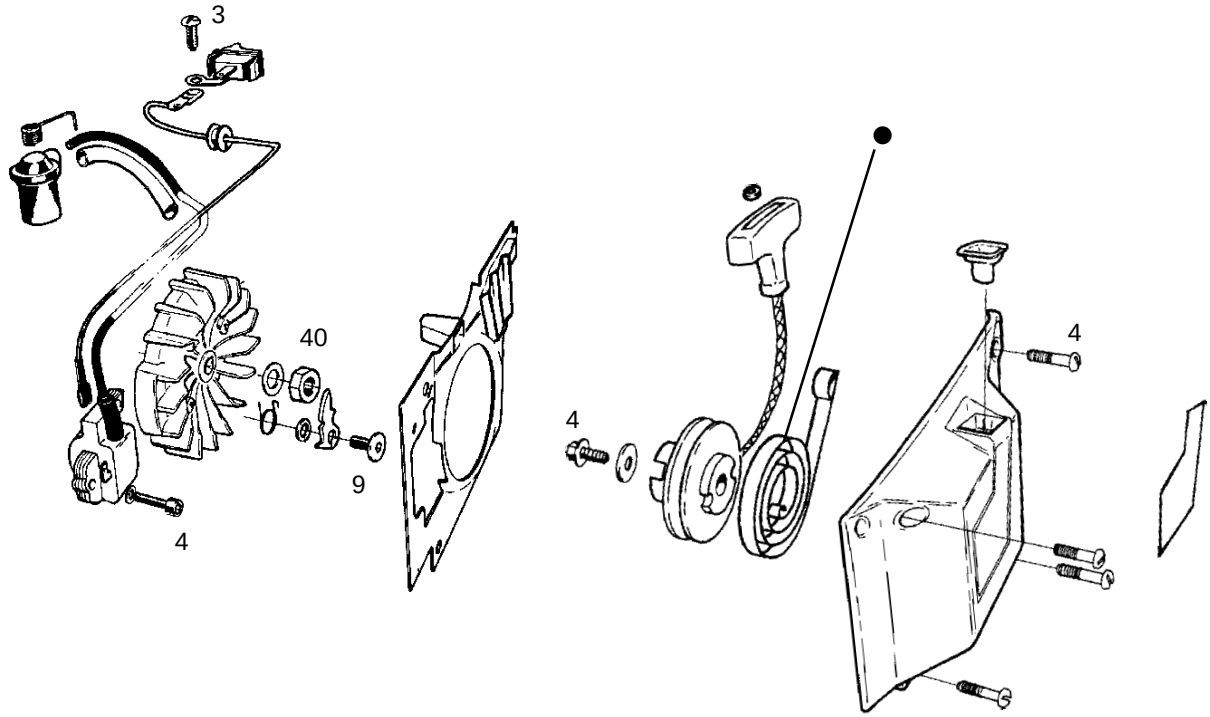

Downloaded from www.Manualslib.com manuals search engine

Trouble shooting schematic

Faults that can develop on the chain saw are divided into four groups as follows. In each category, possible malfunctions are shown on the left, with a list of possible faults on the right. The most probable fault is given first and so on.

Starting

Difficult starting	Adjust L-screw Air filter blocked Choke not working correctly Worn choke shaft Worn choke plate Fuel filter blocked Fuel line blocked Piston ring seized Blocked impulse channel
Carburettor leaking fuel	Loose or faulty fuel pipe Hole in diaphragm Worn needle valve/needle Control system sticking Control system set too high Leak in control system (air or fuel) Loose cover on carburettor pump side
Flooding when the engine is not running	Worn needle valve Control system set too high Control system sticking

Idling (low rpm)

Will not idle	Adjust L-screw Leaking manifold (intermediate) Loose carburettor mounting Loose or faulty fuel pipe Fuel filter blocked Fuel line blocked Fuel tank breather blocked Throttle shaft and lever stiff Throttle cable sticking Defective throttle return spring Bent throttle lever shaft stop Faulty diffuser jet
Idling too rich	Adjust L-screw Worn needle valve/needle Control system set too high Worn throttle lever Leaking control diaphragm/ cover plate Control system sticking

Idling (low rpm) (cont.)

Idles when L-screw closed	Worn needle valve/needle Leaking control diaphragm/ cover plate Control system sticking Worn throttle lever Faulty diffuser jet
Idling uneven	Fuel filter blocked Fuel line blocked Leaking manifold Loose carburettor mounting Worn throttle valve shaft Loose throttle valve screw Worn throttle valve Control system sticking Leak in throttle system (air or fuel) Control diaphragm centre knob is worn Hole in diaphragm Leaking control diaphragm/ cover plate Crankcase leaking
L-screw requires constant adjustment	Fuel line blocked Control system set too high Control system sticking Control system (air or fuel) Leaking control diaphragm/ cover plate Faulty diffuser jet Crankcase leaking
Too much fuel at idling	Control system set too high Control system sticking Control system damaged Worn needle valve Leaking control diaphragm/ cover plate Control system incorrectly assembled

Downloaded from www.Manualslib.com manuals search engine

High rpm

Will not run at full throttle	Adjust H-screw Blocked air filter Blocked fuel tankbreather Blocked fuel filter Fuel line blocked Loose or damaged fuel line Impulse channel leaking Impulse channel blocked Loose cover on carburettor pump side Faulty pump diaphragm Leaking manifold Loose carburettor mounting Control system set too low Control system damaged Control system incorrectly assembled Leaking control diaphragm/cover Control system sticking Blocked silencer
Low power	Adjust H-screw Blocked fuel tankbreather Blocked fuel filter Impulse channel leaking Impulse channel blocked Loose cover on carburettor pump side Faulty pump diaphragm Blocked air filter Control system sticking Leak in throttle system (air or fuel) Control system incorrectly assembled Loose diaphragm Hole in diaphragm Leaking control diaphragm/cover Blocked fuel tank breather Blocked fuel filter
Will not ”four-stroke”	Fuel line blocked Loose or damaged fuel line Impulse channel leaking Impulse channel blocked Loose cover on carburettor pump side Faulty pump diaphragm Leaking manifold Loose carburettor mounting bolts Control system set too low Leak in throttle system (air or fuel) Control system incorrectly assembled Loose diaphragm Hole in diaphragm Leaking control diaphragm/cover

Acceleration and retardation

Does not accelerate	Adjust L-screw Adjust H-screw Blocked air filter Blocked fuel tankbreather Blocked fuel filter Fuel line blocked Loose or damaged fuel line Impulse channel blocked Loose cover on carburettor pump side Faulty pump diaphragm Leaking manifold Loose carburettor mounting Throttle set too low Control system incorrectly assembled Control system sticking Faulty diffuser jet Blocked silencer
Motor stalls when throttle released	Adjust L-screw Adjust H-screw Faulty pump diaphragm Control system set too high Control system sticking Faulty diffuser jet
Over rich accelera-tion	Adjust L-screw Adjust H-screw Blocked air filter Faulty pump diaphragm Faulty diffuser jet

Trouble shooting methods

In addition to faults given in the above schematic, trouble shooting can be carried out on a specific component or sub-system of the chain saw. The different testing procedures are described in respective sections and are as follows:

1. Pressure testing the carburettor.
   See page 100.

2. Pressure testing the crankcase and cylinder.
   See page 114.

3. Pressure testing the decompression valve.
   See page 114.

4. Checking the operation of the chain brake.
   See page 47.

Downloaded from www.Manualslib.com manuals search engine

Chain brake

Dismantling

Dismantle the clutch cover and clean. See the operating instructions.

Slide the hand guard forwards so that the brake is actuated.

Loosen the screw on the hand guard and screw back 2 turns.
Gently hit the screw so that the threaded part of the bushing can be removed.
Dismantle the other part of the bushing by means of a punch.
Remove the cylindrical pin A.

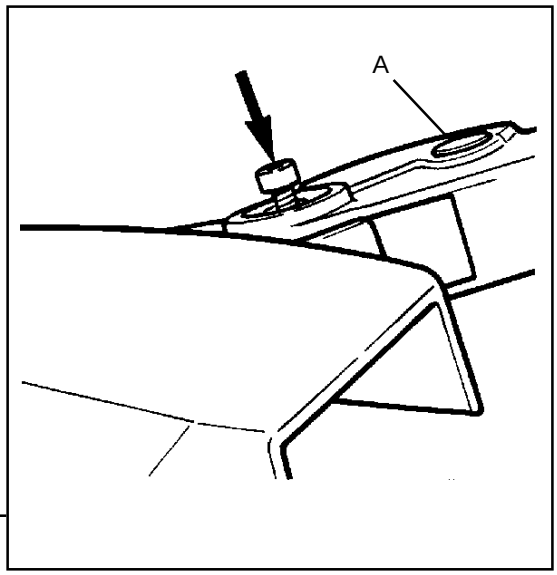

All saws except 3120

Remove the cover on the chain brake spring.
The cover has 4 or 5 screws.

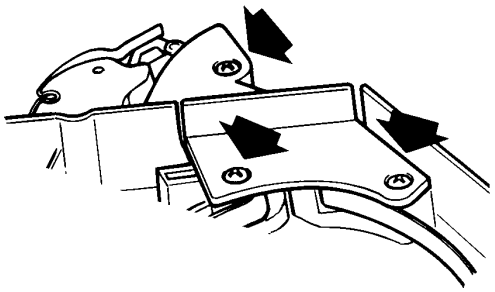

WARNING!
If the brake is not 'on', the spring can fly out resulting in personal injury.
Wear protective glasses!

Continues on next page.

3120

WARNING!
If the clutch cover slides out of the vice's grip the spring can fly out with immense force resulting in personal injury!
Wear protective glasses!

Place the clutch cover in a vice with the jaws positioned as shown below and release the tubular pin B.
Carefully knock out the tubular pin B.

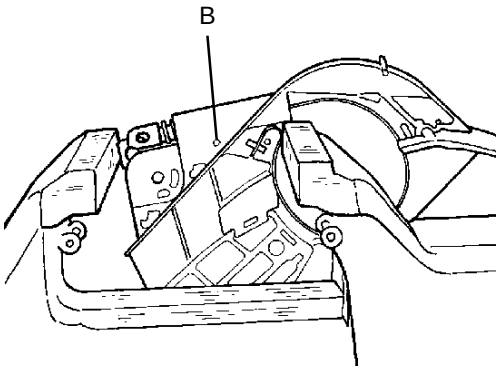

3120 continues on next page.

Downloaded from www.Manualslib.com manuals search engine

All saws except 3120

Slide up the back edge of the spring with a screwdriver.

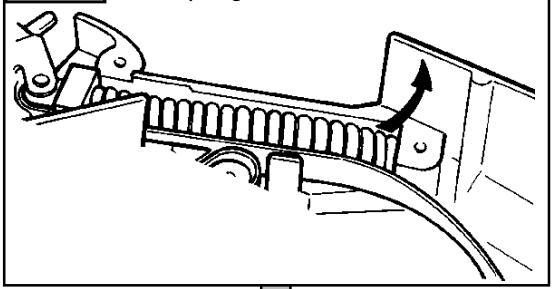

Use a punch to knock out the pin holding the knee link.

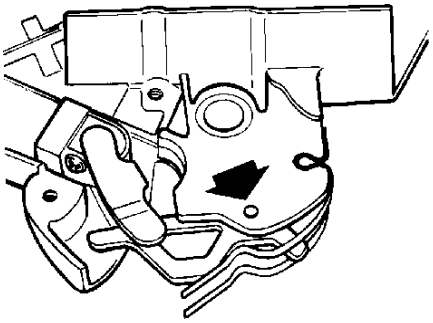

36, 41, 61, 268, 272, 281 and 288

40, 42, 45, 51, 242, 246, 55, 254, 257, 262 and 394

Lift up the band's fixed end using a screwdriver and remove the loose parts.

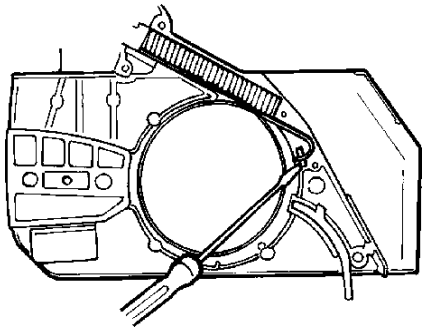

3120

Carefully unscrew the vice so that the pressure rod and the ratchet move out of the clutch cover.

Dismantle the pressure rod from the brake band.

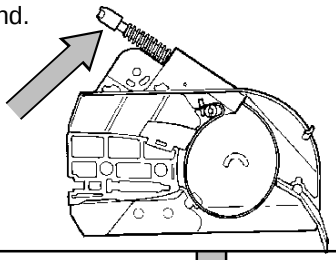

Remove the screw that holds the fixed end of the band.

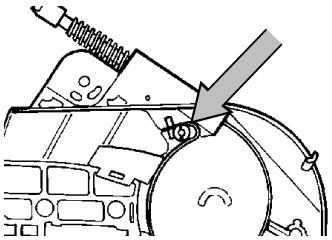

Knock out the band's fixed end using a punch through the hole in the clutch cover and remove the loose parts.

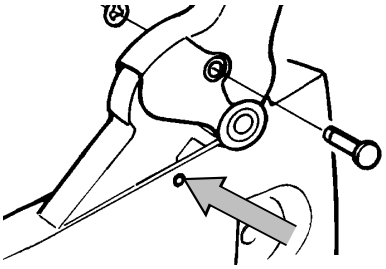

Downloaded from www.Manualslib.com manuals search engine

Cleaning and Inspection

Clean and inspect all parts.
The thickness of the brake band must not be under 0.8 mm at any point.

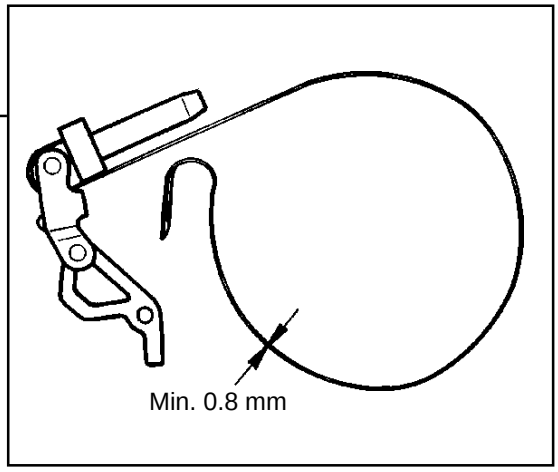

Assembly

Fit the band's fixed end into position on the clutch cover.

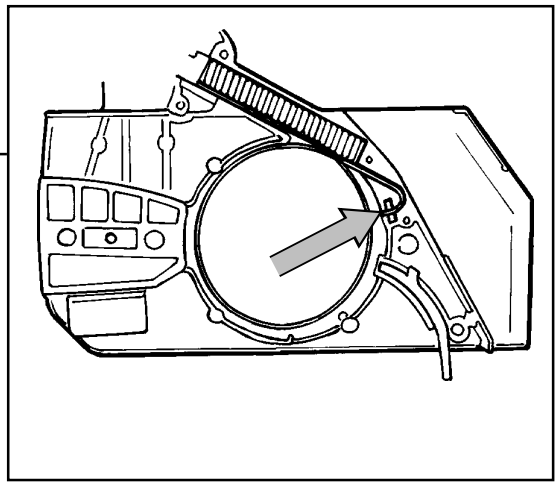

All saws except 3120

Grease the knee link and knock in the tubular pin that holds the knee link.

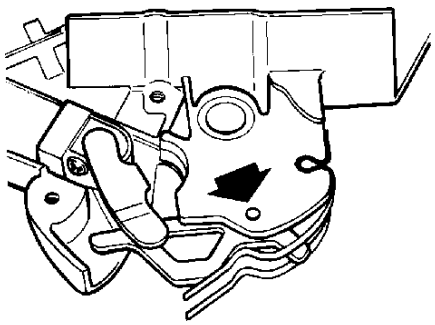

Continues on next page.

3120

Fit the screw that holds the band's fixed end.

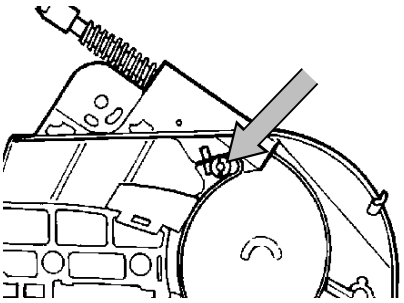

3120 continues on next page.

Downloaded from www.Manualslib.com manuals search engine

All saws except 3120

Slide the spring over the knee link's stud and press down the opposite end of the spring into its recess.

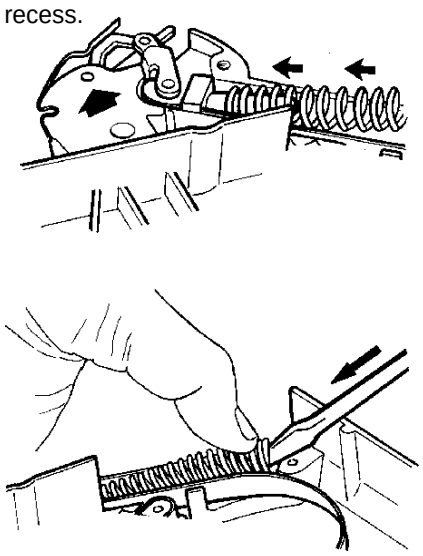

Fit the cover over the spring.

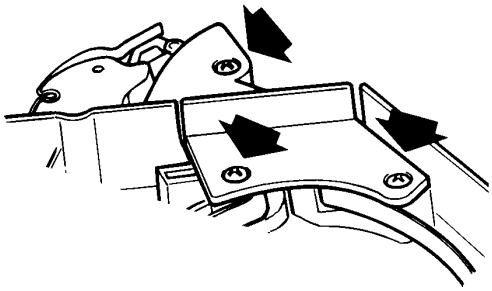

Continues on next page.

3120

Fit the spring and screw onto the pressure rod on the brake band.
Note! Plastic sleeve.
Bottom the screw onto the pressure rod thread and back off 4-5 turns.

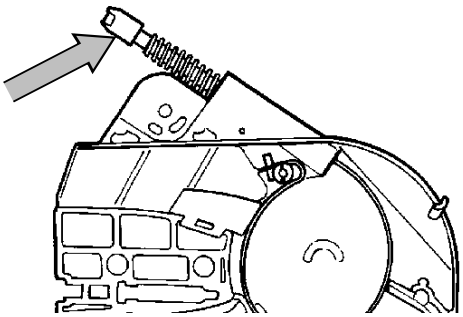

WARNING!
If the clutch cover slides out of the vice's grip the spring can fly out with immense force resulting in personal injury!

Grease and fit the ratchet. Set the unit in a vice, positioned in the jaws as shown below.

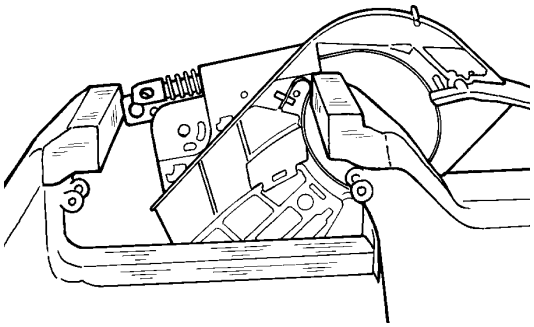

3120 continues on next page.

Downloaded from www.Manualslib.com manuals search engine

All saws except 3120

3120

Carefully tighten the vice until the hole for the tubular pin and the ratchet align.

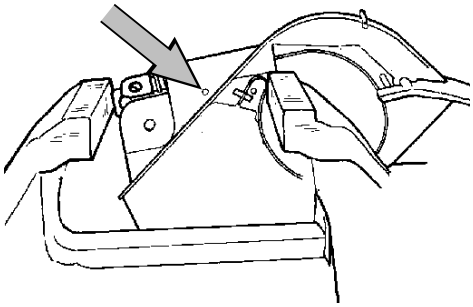

Carefully knock in the pin.

Fit the hand guard, the two bushings and the screw.

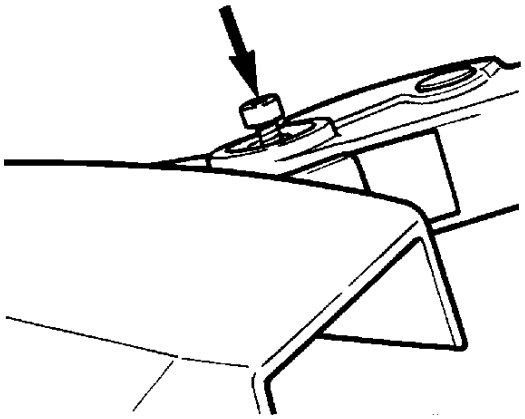

Fit the cylindrical pin.

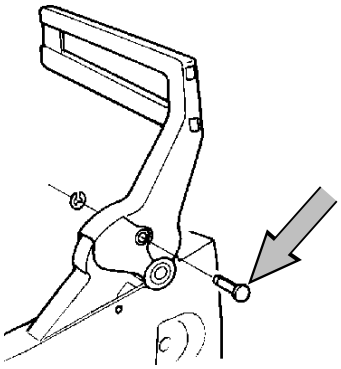

Pull back the hand guard so that the brake is not actuated.

Check the chain brake as described on the next page.

Downloaded from www.Manualslib.com manuals search engine

Checking brake operation

WARNING!
After repair, the chain brake must be checked as set out in the following instructions.

The engine should not be running during the test.
Test that the chain brake comes on as follows:

Hold the chain saw above a firm surface. The distance between the bar and the surface are shown in the table below.

Bar length, L	Height, H
15-20 inches	50 cm
21-28 inches	70 cm
29-32 inches	80 cm

Release the front handle and let the chain saw rotate around the rear handle.

When the bar nose hits the surface the chain brake should trip.

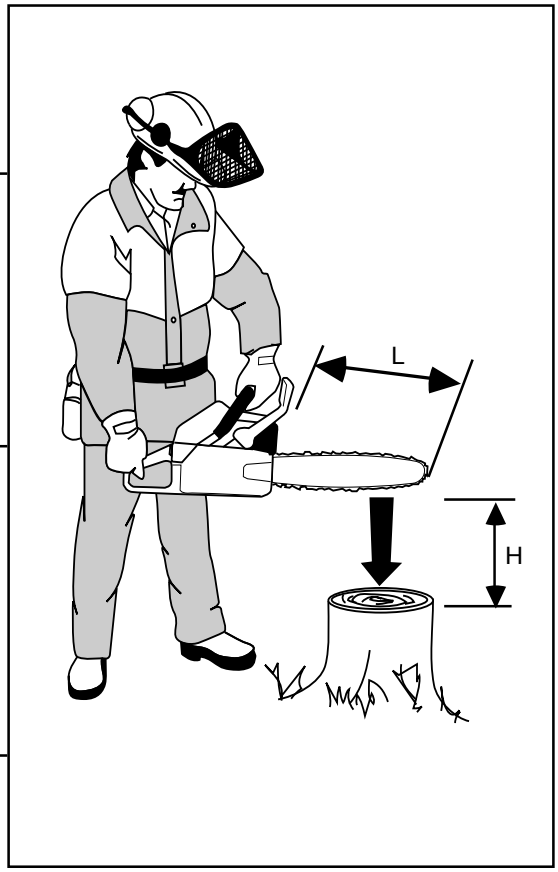

Downloaded from www.Manualslib.com manuals search engine

Chain catcher

Description

The chain catcher is intented to catch the chain if it should break.
The chain catcher has a different design and is secured differently on the chain saws described in this manual.

The following designs are used:
- Aluminium angle.
- Plastic angle.
- Fixed roller.
- Rotating roller.

The following securing methods are used:
- Using screws on the crankcase.
- Using screws on the spike.
- Using nuts on the spike.

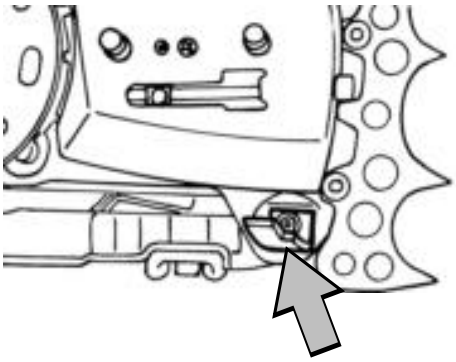

Replacing

Dismantle the chain and bar. See the operating instructions

↓

Check the chain catcher and replace if broken or badly damaged.
The tightening torque is stated in the service data

↓

Reassemble the chain and bar. See the operating instructions

Downloaded from www.Manualslib.com manuals search engine

Muffler

Dismantling

WARNING!
Do not touch the muffler until it has cooled. Risk of burns!

If the saw is equipped with muffler mounting (A), unscrew this from the crankcase and muffler.

Unscrew the muffler from the cylinder (M5 or M6 bolts, M5 or M6 nuts).

Remove the muffler, gasket and cooling plate (B) if the saw is so equipped.

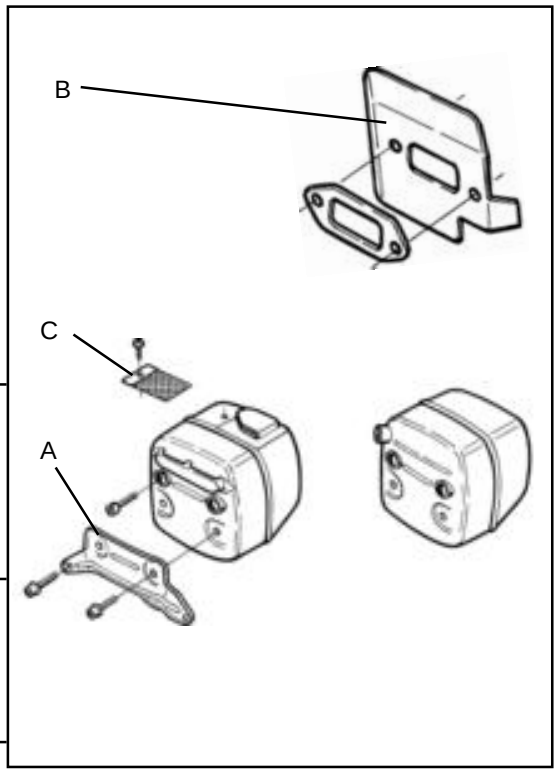

If the saw is equipped with a spark arrester (C), remove this.

Saw 242 Cat

Saws 36 and 41

Dismantle the muffler as shown in the figure to the right.

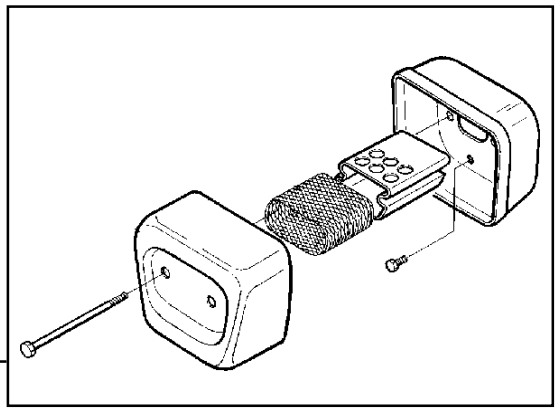

WARNING!
The coating on and in the catalytic converter element (A) is hazardous to your health if touched. Wear protective gloves when working on a catalytic converter

Dismantle the muffler as shown in the figure to the right.

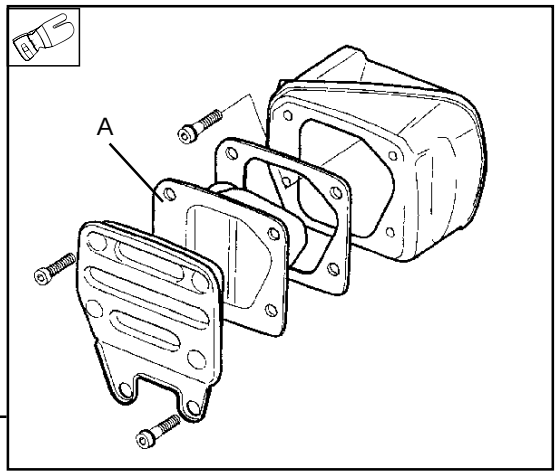

Downloaded from www.Manualslib.com manuals search engine

Cleaning and Inspection

WARNING!
The coating on and in the catalytic converter element (A) is hazardous to your health if touched. Wear protective gloves when working on a catalytic converter

Clean all parts and check the following:
- That the muffler and muffler mountings are not cracked or otherwise damaged.
- That the gaskets are OK.

Assembly

Clean all contact surfaces.

Saws 36 and 41

Assemble the muffler and fit to the cylinder. Tightening torque, see page 20.

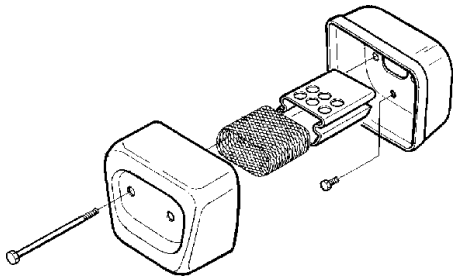

Other saws

If the saw is equipped with a spark arrester (C), fit this.

Fit the cooling plate (B) if fitted, gasket and muffler on the cylinder.

242 Cat

WARNING!
The coating on and in the catalytic converter element (A) is hazardous to your health if touched. Wear protective gloves when working on a catalytic converter

Only specially treated bolts may be used on the catalytic converter (high temperature). See spare parts catalogue.

See "Service data" regarding tightening torques.
1. Secure the muffler on the cylinder using the two bolts (D).
2. Assemble the muffler components using the four bolts (E).
3. Secure the muffler to the crankcase using the two bolts (F) and Loctite.

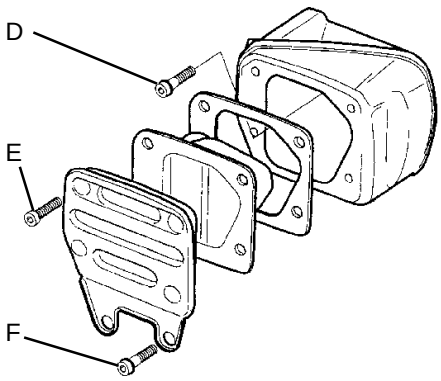

Other saws

Tighten all bolts using the tightening torque set out in the "Service data".

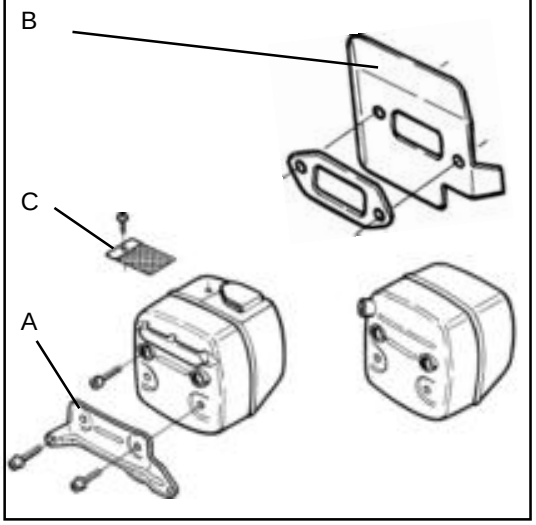

Downloaded from www.Manualslib.com manuals search engine

Stop switch

Dismantling

Remove the earth screw (A) and cable (B).

Press the switch's securing tabs (C) towards each other and push out the switch.

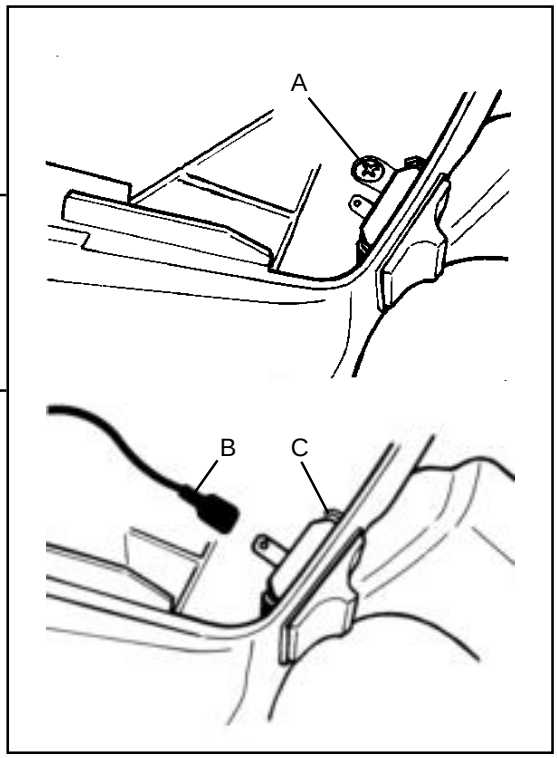

Cleaning and Inspection

Clean the switch and check its resistance as follows:

Connect an ohm meter as shown in the fig.
The resistance should be:
In the stop position less than 0.1 ohm.
In the run position more than 1000 ohm.

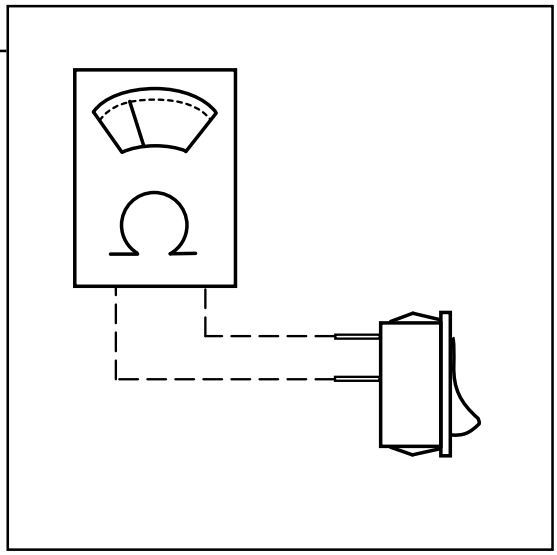

Assembly

Press the switch into the socket on the tank unit.

Fit the earth screw (A) and cable (B).

Note! On some models the earth cable should be connected to the earth screw.

Downloaded from www.Manualslib.com manuals search engine

Throttle lock

Dismantling

Saws 40, 45.

See continuation on next page.

Other saws.

WARNING!
The fuel used in the chain saw poses the following hazards:
1. **The liquid and its vapours are poisonous.**
2. **Can cause skin irritation.**
3. **Is highly inflammable.**

Remove the tank unit from the engine assembly. See page 103.

Saws 61, 268, 268K, 272XP, 272K, 272S, 281XP, 288XP and 394.

Saw 3120.
See continuation on next page.

Dismantle the throttle lock pin (A) using a punch.

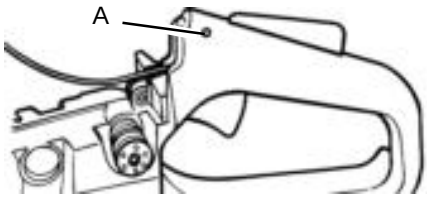

Saw 394

Turn the throttle lock as shown in the figure, and lift it out with the spring from the cut-out in the handle.

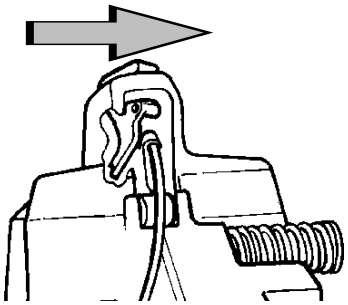

Saws 61, 268, 272XP, 272K, 272S, 281XP and 288XP.

Slide the throttle lock and remove it forwards as shown in the figure.

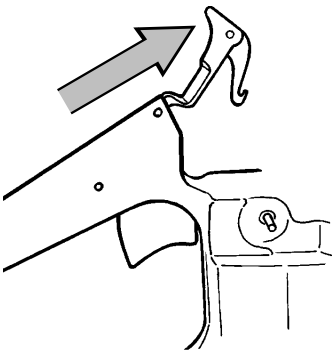

Saws 36, 41, 42, 55, 242XP, 246, 51, 254XP, 257 and 262XP.

Carefully prise up the lock from the slot and remove.

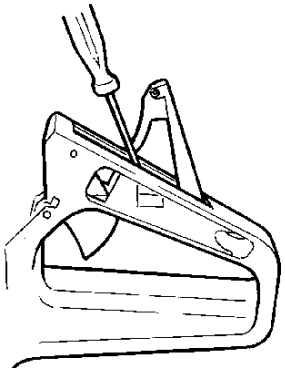

Continues on next page.

Downloaded from www.Manualslib.com manuals search engine

Saws 61, 268, 268K, 272XP, 272K, 272S, 281XP, 288XP and 394.

Dismantle the throttle pin (B) by using a punch.

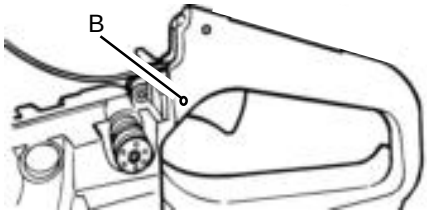

Dismantle the throttle. On saw 394, also remove the throttle cable.

Saws 40 and 45

Remove the three screws in the side of the handle as well as the screw holding the spring under the handle.

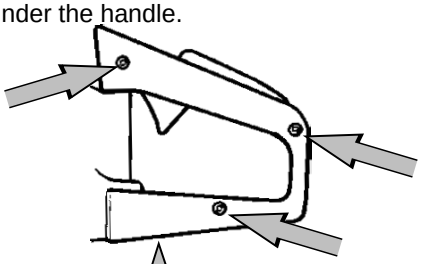

Lift out the throttle lock and the throttle.

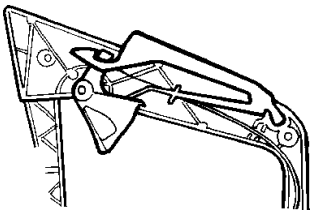

Saws 36, 41, 42, 55, 242XP, 246, 51, 254XP, 257 and 262XP.

Remove the rubber element (A). Slide out the throttle pin (B) and lift out the throttle arm and spring.

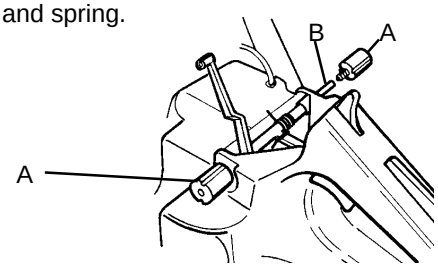

Saw 3120

Remove the three pins with a punch.

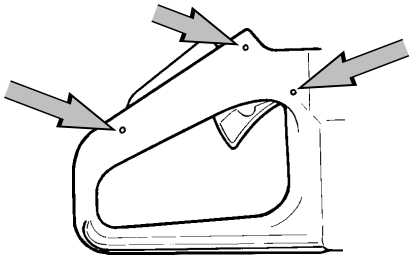

Press the throttle lock down and move it and the trigger forwards until the back edge of the lock appears.

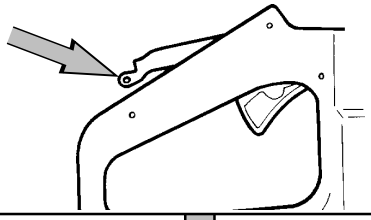

Lift out the trigger lock.

Lift out the throttle with cable from the front.

Remove the springs where appropriate.

Downloaded from www.Manualslib.com manuals search engine

Cleaning and inspection

Clean all parts.

Check that the lock's activation mechanism is not worn. For examples of the activation mechanism, see the figure.

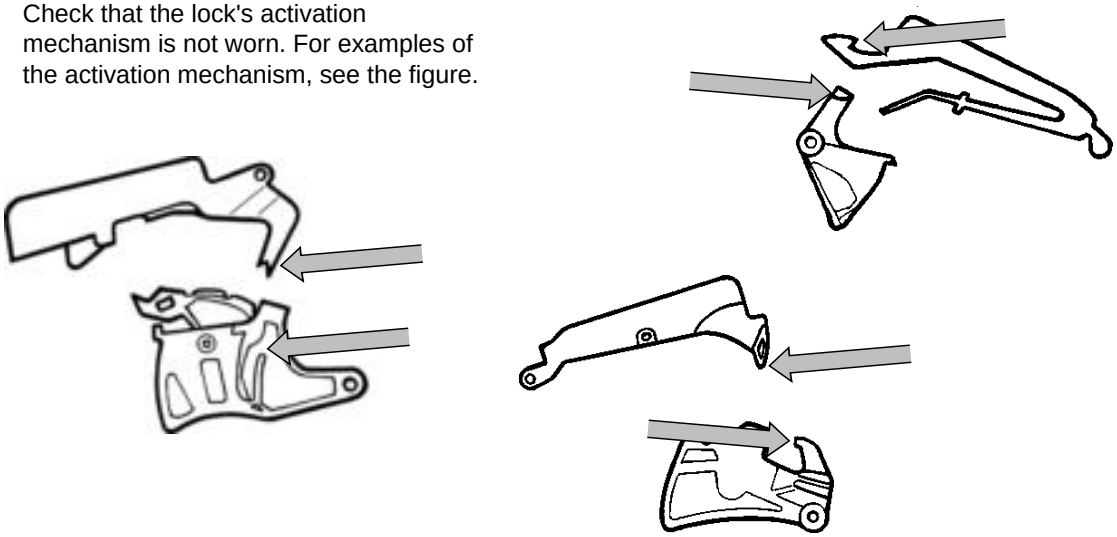

Check that the springs, where fitted, are OK and have the correct tension.

On those saws fitted with a throttle cable, check that the cable and lever are OK and run freely.

Downloaded from www.Manualslib.com manuals search engine

Assembly

Saws 36, 40, 41, 45, 42, 242XP, 246, 51, 55, 254XP, 257 and 262XP.

Other saws.

WARNING!
The fuel used in the chain saw poses the following hazards:
1. **The liquid and its vapours are poisonous.**
2. **Can cause skin irritation.**
3. **Is highly inflammable.**

Fit springs in appropriate cases.

Saws 36, 41, 42, 242XP, 246, 51, 55, 254XP, 257, 262XP and 394.

Saws 61, 268, 268K, 272XP, 272K, 272S, 281XP and 288XP. See next page.

Saws 40, 45.

Saw 3120.

On saw 394, fit the cable to the trigger. Insert them into the handle from the front.

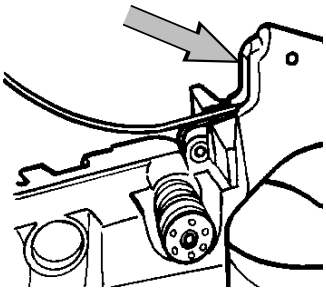

Fit the cable to the trigger and install the throttle lock and trigger.

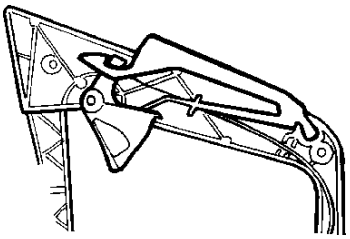

Fit the trigger with the cable from the front.

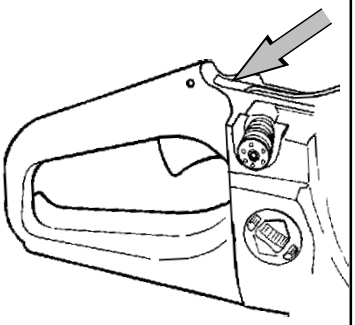

Fit the pin (B) and spring (when used).

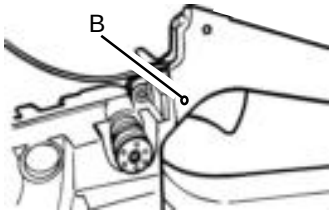

Fit the side of the handle using three screws on the side and one underneath, which holds the spring.

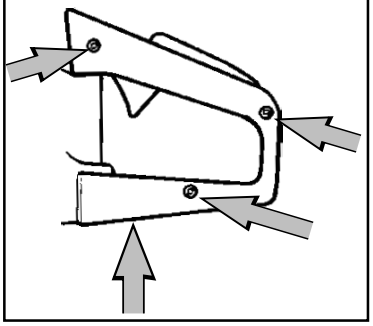

Fit the spring and slide the throttle lock forwards from above so that its rear edge can be slid in under the edge of the handle.

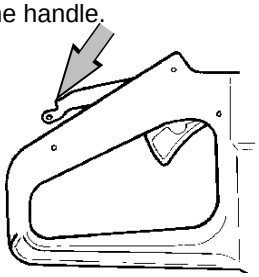

All saws except 40 and 45 continue on the next page.

Downloaded from www.Manualslib.com manuals search engine

Saws 36, 41, 42, 242XP, 246, 51, 55, 254XP, 257, 262XP and 394.

Fit the throttle lock and spring. On saw 394, twist as shown in the figure when fitting.

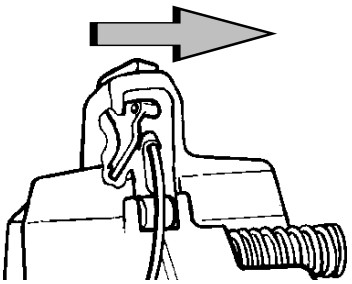

Saws 61, 268, 268K, 272XP, 272K, 272S, 281XP and 288XP.

Fit the throttle arm and spring. Fit the pin and the two rubber dampers.

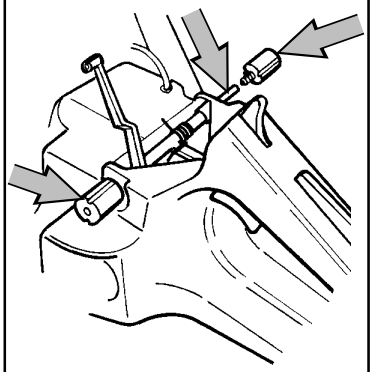

Fit the throttle lock from the front.

Saw 3120.

Fit the three pins that hold the cable bracket, throttle lock and trigger.

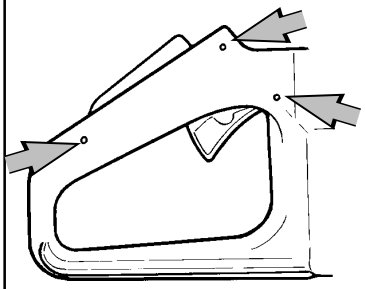

Fit the throttle lock pin.

Fit the tank unit. See page 105.

Downloaded from www.Manualslib.com manuals search engine

Dismantling

Dismantle the starter
See the operating instructions.

Pull out the cord 20-30 cm andinsert it into the cut-out in the starter pulley rim.
Some saws have several long cut-outs.

Rotate the starter pulley anticlockwise until the spring-tension on the starter pulley ceases.

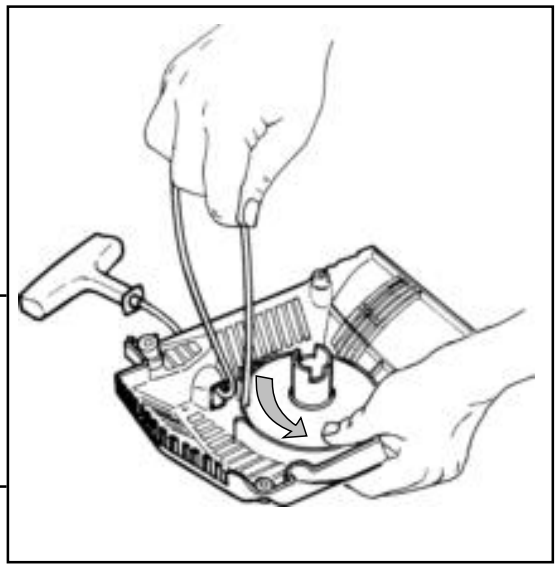

Dismantle the starter pulley's centre bolt and washer.

WARNING!
If the spring tension is released when lifting the starter pulley, the spring can fly out and cause personal injury!
Wear protective glasses!

Lift out the starter pulley carefully.

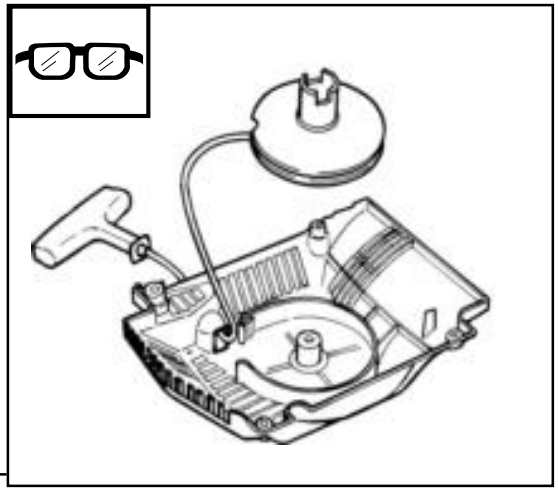

If the starter has a cord guide (A), remove this

If the cord is to be replaced, cut it off and pull out the bits from the handle and starter pulley using a pair of long nosed pliers.

WARNING!
Ensure that the spring does not fly out and cause personal injury!
Wear protective glasses!

If the spring is to be replaced, remove the old spring from the starter pulley. Some saws have a protective plate over the spring.

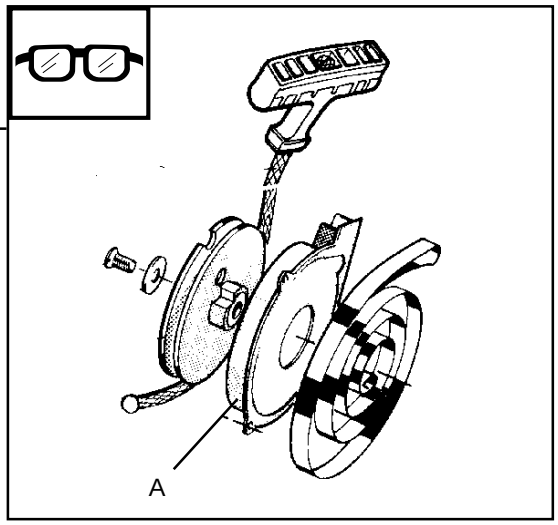

Downloaded from www.Manualslib.com manuals search engine

Cleaning and Inspection

WARNING!
Ensure that the spring does not fly out and cause personal injury!

Clean all parts and check the following:

The starter cord.

The dogs in the starter pulley.

That the pawls on the flywheel are OK, and spring back towards the centre and move freely.

Changing the ferrule

Remove the parts of the old ferrule.

Fit the new ferrule in the starter housing.

Use a wrench, spacer (A) and ball (B). Splay out the ferrule on the inside as shown in the figure.

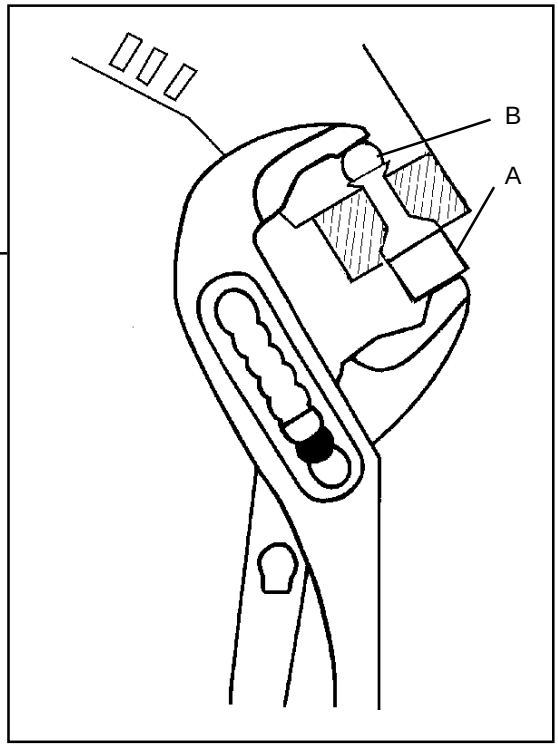

Downloaded from www.Manualslib.com manuals search engine

Assembly

WARNING!
Ensure that the spring does not fly out and cause personal injury!

If a new spring is to be fitted, position in its security/holder so that the eye is over the stud in the starter cover.

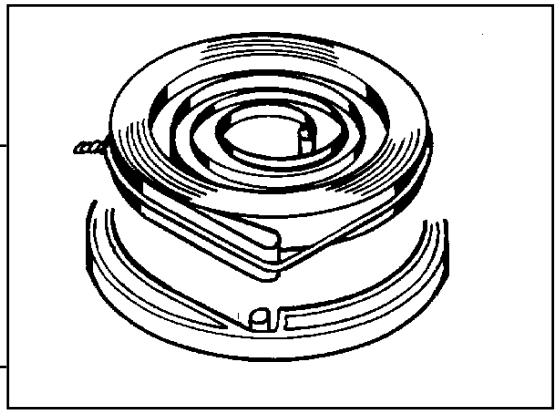

Slide in the spring and remove the security/ holder.

If a new cord is to be fitted, put the free end in the hole on the starter pulley. Grip the end using long nosed pliers and pull the cord through.

36 and 41.

Screw the cord to the starter pulley.

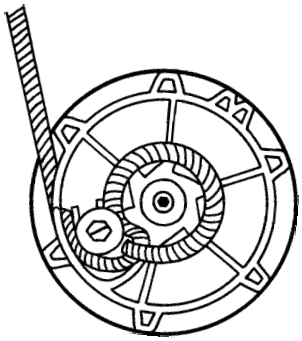

61, 268, 272, 281 and 288.

Secure the cord on the starter pulley.

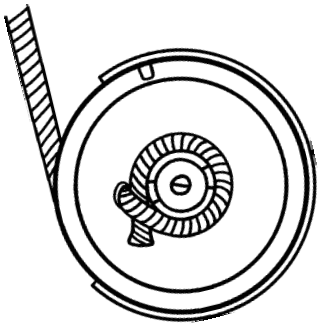

42, 242, 246, 51, 55, 254, 257,262, 394 and 3120.

Knot the cord on the starter pulley.

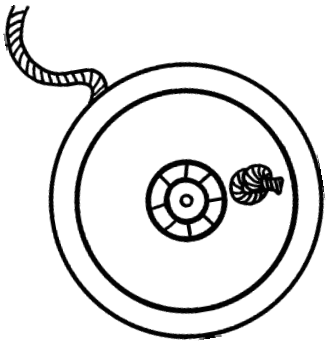

Continues on next page.

Downloaded from www.Manualslib.com manuals search engine

Grease the return spring and starter pulley bearing.

If the starter unit has a cover plate (B) over the spring, fit the plate.

Fit the starter pulley. Rotate back and forth until the starter pulley catches in the spring.

Fit the starter pulley washer and bolt and tighten the bolt to 4 Nm.

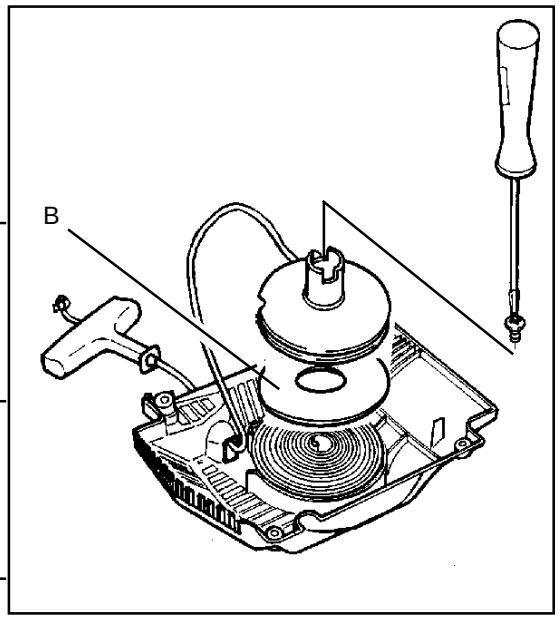

If the starter has a cord guide (A), fit this.

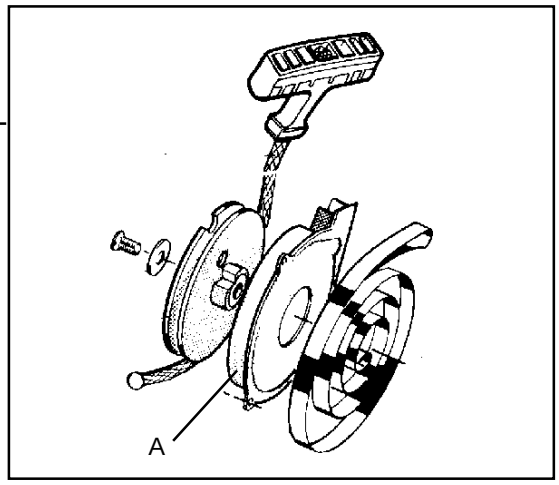

Pull out the cord through the hole in the cover and fit the handle, secure with a double knot.

Pull out the cord 20-30 cm and insert it into the cut-out on the starter pulley rim. Some saws have several long cut-outs.

Rotate the starter pulley clockwise until the cord is correctly tensioned.

Check the cord tension

A. Pull out the cord completely and hold the pulley with your thumb.
B. In this position it should be possible to turn the starter pulley a further 1/2 - 3/4 turn.

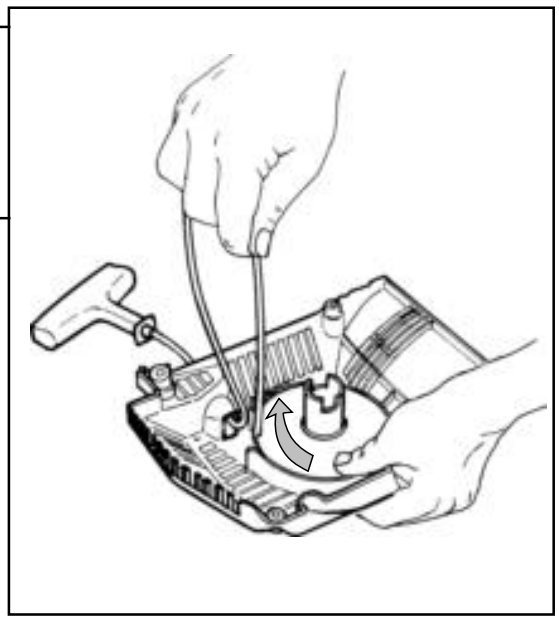

Fit the starter on the crankcase. Tighten the bolts to 4 Nm.

Downloaded from www.Manualslib.com manuals search engine

Ignition system

In the event of a fault in the ignition system the ignition module should be checked before dismantling the ignition system.

Check the ignition module as follows:

- Connect test spark plug 502 71 13-01 to the HT lead and clamp the test spark plug to the cylinder.
- Turn the engine over using the starter.
- If the test spark plug sparks the ignition module is OK.

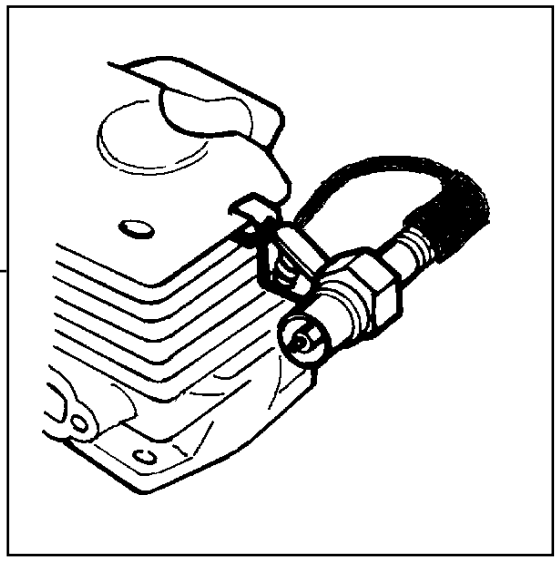

Dismantling

Remove the cylinder cover and the starter unit.

Remove the spark plug and fit the piston stop.

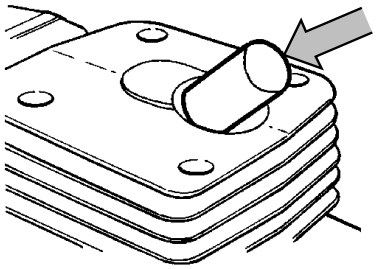

Loosen the cable that runs to the stop switch from the ignition module.

Release the cables from the guide rail and remove the guide rail.

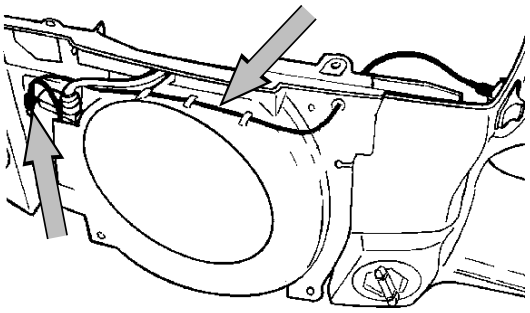

Saws 36 and 41.

- Loosen the flywheel nut and unscrew it 1 turn
- Tap the nut quickly with a hammer so that the flywheel comes loose
- Remove the nut and flywheel.

Other saws, see next page.

Downloaded from www.Manualslib.com manuals search engine

All saws except 36 and 41.

Unscrew the two pawls and springs located on the flywheel.

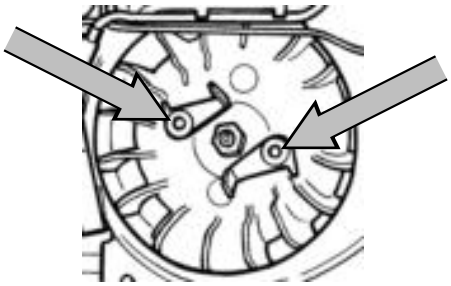

Loosen the flywheel nut and undo until it aligns with the end of the shaft.

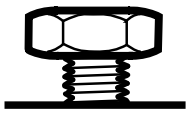

Fit puller 502 51 49-02 and loosen the flywheel.

Remove the puller, nut and flywheel.

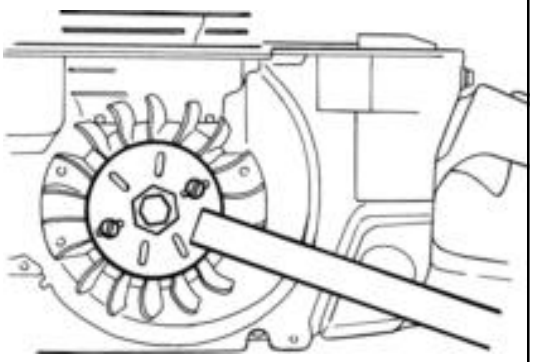

Continuation all saws

Remove the ignition coil.

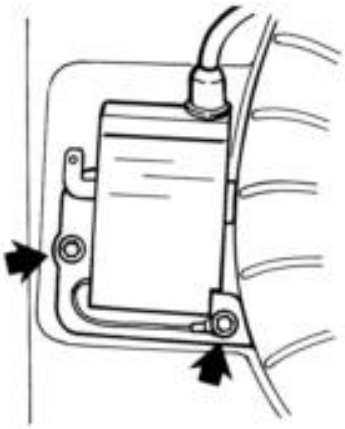

The generator can be unscrewed if the saw is fitted with a handle heating system.
Remove all parts so that the cable can be released. See applicable sections.

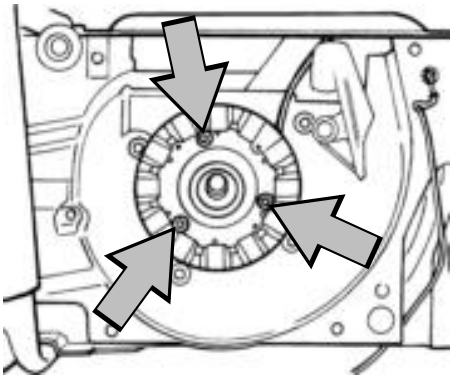

Downloaded from www.Manualslib.com manuals search engine

Cleaning and Inspection

Clean all parts, especially the flywheel and shaft taper.
Check that the flywheel is not cracked or damaged in any other way.

Assembly

Fit the generator if the saw is fitted with handle heating.
Tighten the bolts to 4 Nm and lock using Loctite.
Fit the cable to the actual contact on the saw. Adjust the length of the cable by knotting it.

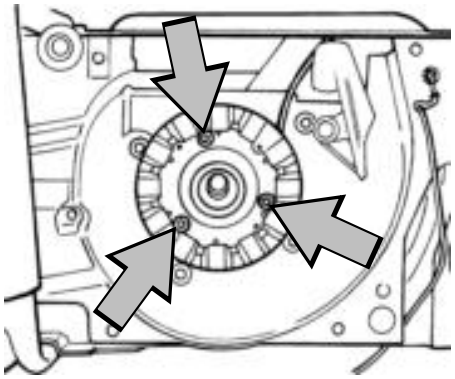

Place the flywheel on the crankshaft. Rotate gently until the flywheel's key mates in the keyway on the shaft

- Replace the flywheel washer and nut. Tightening torque, see "Service data".
- Remove the piston stop.

- Fit the ignition module without tightening the screws.
- Turn the flywheel so that its magnet is beside the ignition module.

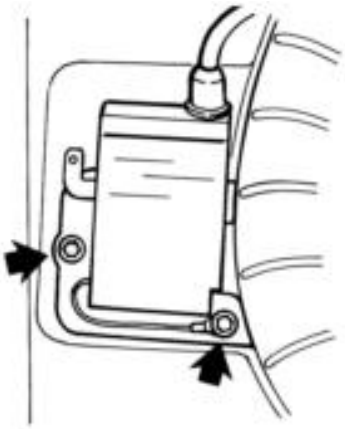

Continue assembly on next page.

Downloaded from www.Manualslib.com manuals search engine

- Insert feeler gauge 502 51 34-02 (0.3 mm) between the ignition module and the flywheel's magnet.
- Push the ignition module towards the flywheel and tighten the bolts to 4 Nm.

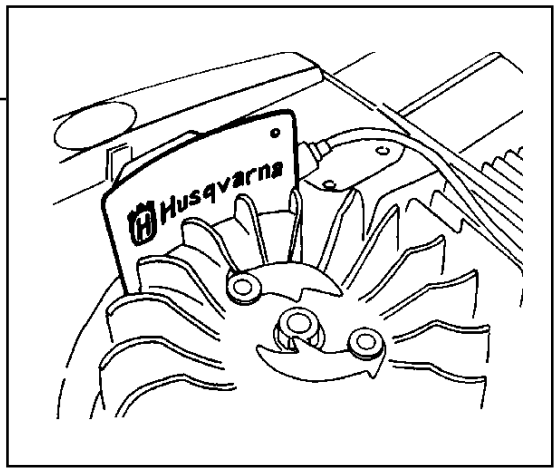

Fit the guide rail, insert the cables and fit the cable to the ignition module.

Saws 42, 242, 246, 281 and 288.

Fit the ignition coil, which is located next to the carburettor and connect the cables. Fit the starter and cylinder cover.

Other saws.

Fit the starter and cylinder cover.

Fitting the spark plug cover

Make a hole in the HT cable using pliers 502 50 06-01.

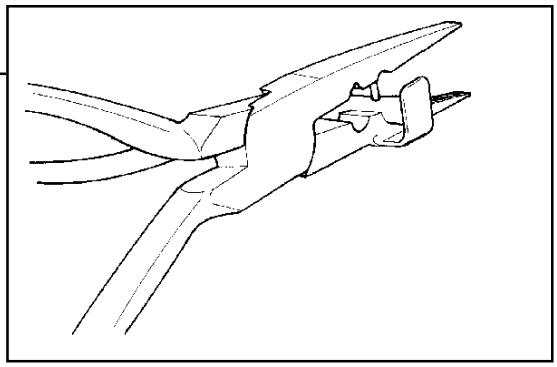

Push the HT cable through the spark plug cover and fit the contact spring using the pliers.

Slide the spark plug cover over the contact spring.

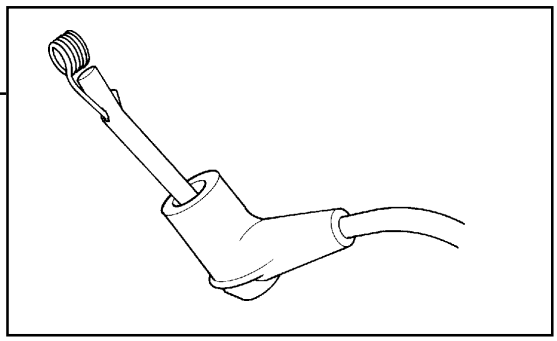

Stop switch

The stop switch is described in the section "Safety equipment". See page 51.

Downloaded from www.Manualslib.com manuals search engine

Handle heating

Description

Some saws are equipped with an electric handle heating. This consists of the following parts:

- Generator.
- Power switch.
- Heater loop in the tank unit.
- Handle loop with heater loop. (One or two loops).

The above components are connected in series, which means that if there is a fault in one, all components stop working.
The wiring diagram is shown in the figure to the right. The order of components can vary from saw to saw.

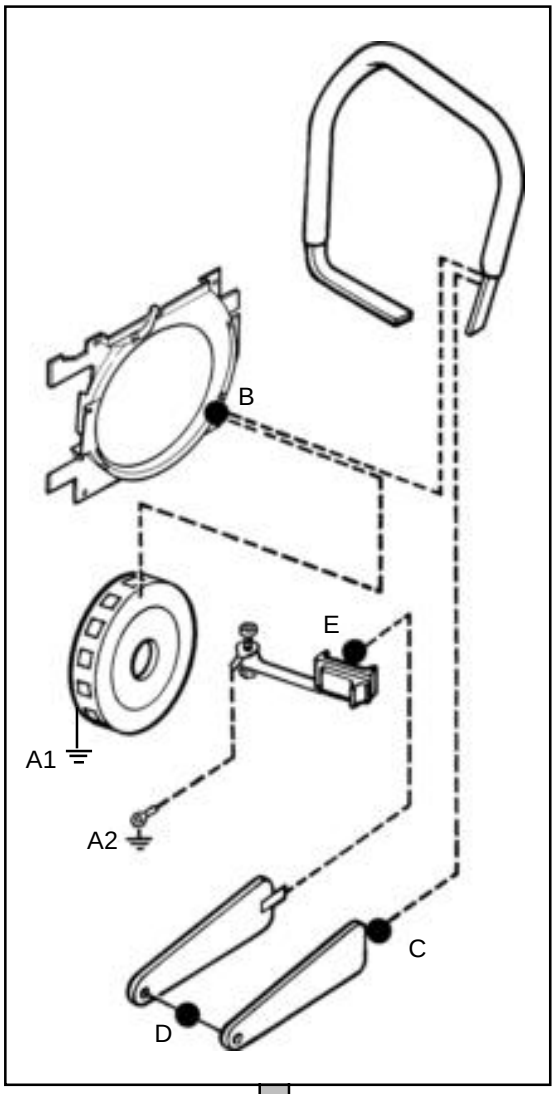

Trouble shooting

Trouble shooting can take place with most components connected to the saw. An ohm meter is required for trouble shooting.

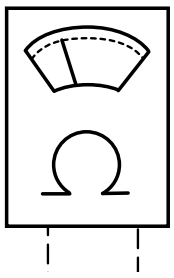

Measurement points:

A1 and A2	Earth. E.g. the cylinder
A1 - B	Measurement of the generator
B - C	Measurement of the handle loop
C - D	Measurement of the heater loops in the rear handle
D - A2	Measurement of the power switch

Before trouble shooting individual components remove the power switch and disconnect one of the switch's cables. Remove other components as necessary. E.g. the cylinder cover. See the operating instructions.

Trouble shooting individual components, see next page.

Downloaded from www.Manualslib.com manuals search engine

Checking the generator

Connect the ohm meter to the cylinder (point A1) and point B. The ohm meter should read 0.9-1.3 ohm.
Replace a generator that has higher or lower values.

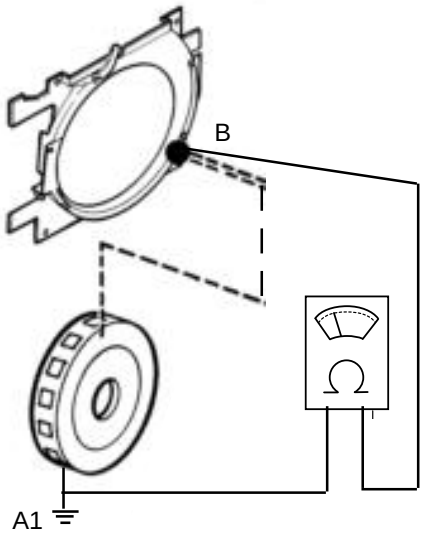

Check the handle loop

Connect the ohm meter to points B and C. The ohm meter should read 3-4 ohm.
Replace the handle loop that has a higher value.

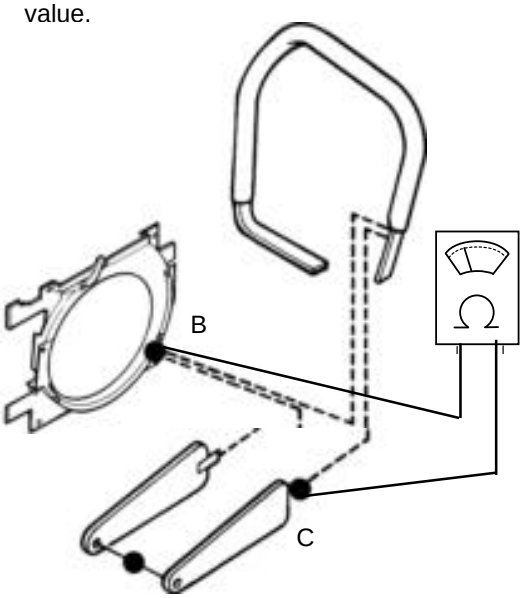

Checking the heat loops in the rear handles

Connect the ohm meter to points C and D. The ohm meter should read 0.7-2.5 ohm.
Replace a heat loops that has higher values.

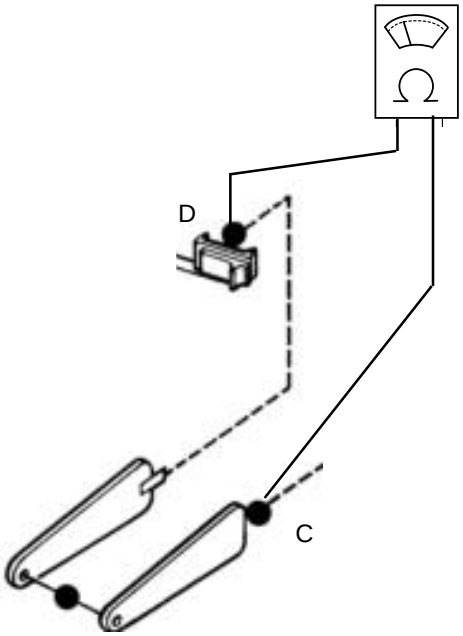

Checking the power switch

Connect the ohm meter across the switch. The ohm meter should read more than 1000 ohm with the switch in position "0".
The ohm meter should read, at the highest, 0.1 ohm with the switch in position "1".

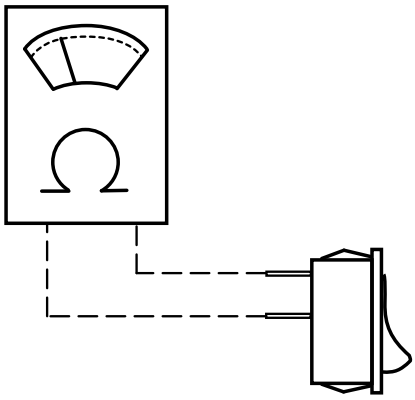

Downloaded from www.Manualslib.com manuals search engine

Dismantling

Remove the bar and chain. See the operating instructions.
On 268K and 272K, remove the cutting attachment. See the operating instructions.
On 272S, remove the grinder attachment. See the operating instructions.

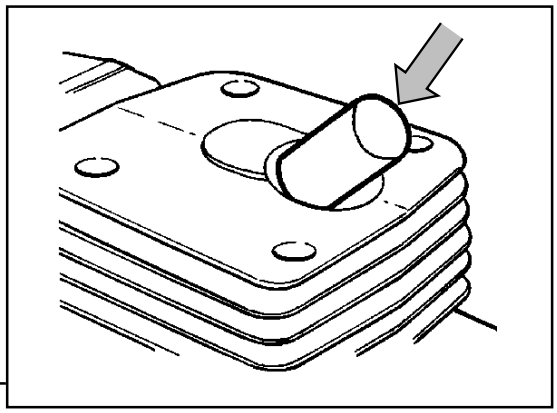

Remove the spark plug and insert the piston stop.

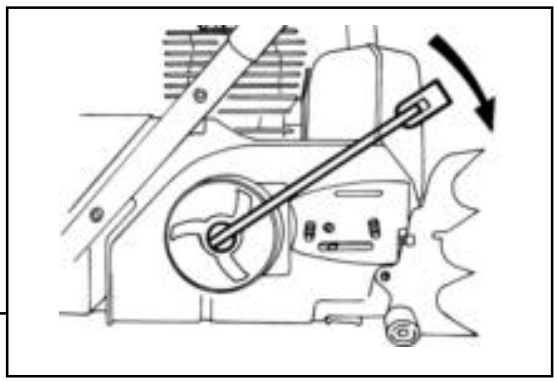

Use a spanner and remove the clutch. On saws 36 and 41 use the service tool no. 530 03 11-12.
Note! Left-hand thread.

Saws with three coil springs.

Remove the springs using a screwdriver.
Then remove the clutch shoes.

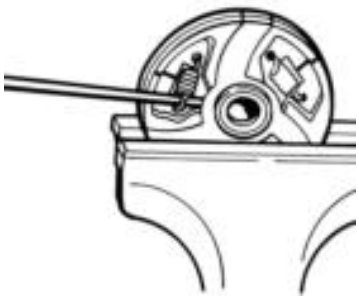

Saws with one long spring.

Remove the spring by first lifting a shoe using a suitable spacer (A).
Then remove the clutch shoes.

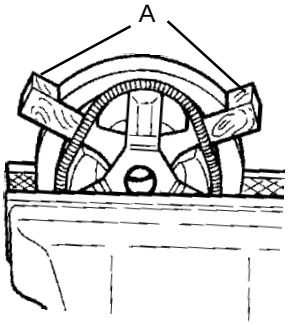

Saws with three C-springs.

Prise out the spring heels using a screwdriver. Remove the springs from the other side using circlip pliers. Then remove the clutch shoes.

Remove the clutch drum and needle bearing.

Downloaded from www.Manualslib.com manuals search engine

Cleaning and Inspection

Clean all parts and inspect the following:

Clutch shoes without chamfers.

That measurement A is not below 1 mm.

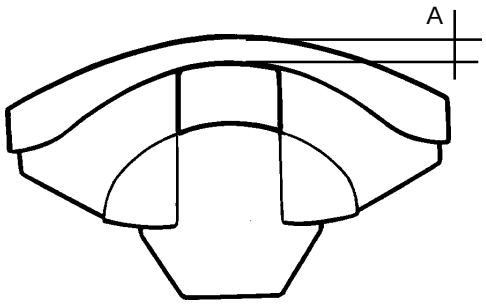

Clutch shoes with chamfers.

That measurement B is not under 1 mm.

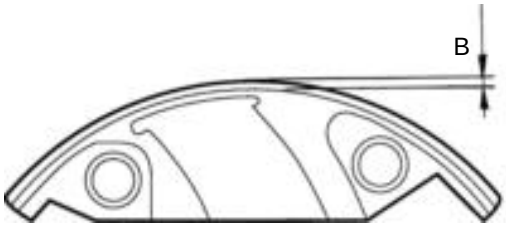

Check that there is no play between the clutch shoe and clutch hub

Check for wear on the chain sprocket.

Check the condition of the needle bearing and the bearing surface on the crankshaft.

That the clutch drum friction surface and bearing surface are undamaged.

Downloaded from www.Manualslib.com manuals search engine

Assembly

Grease the needle bearing (C) and fit onto the crankshaft. Then fit the clutch drum.

NOTE! The bearing can also be greased later through the hole on the crankshaft.

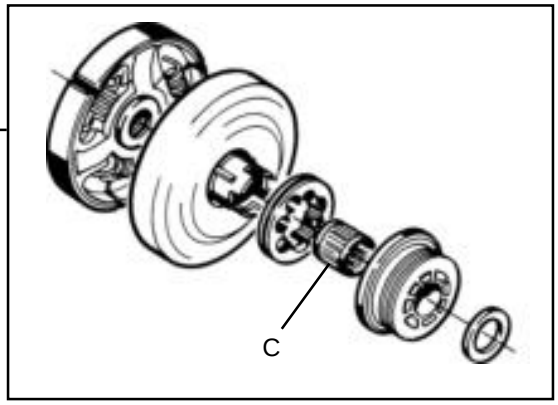

To prevent imbalance all clutch shoes should be replaced at the same time.

Saws with three coil springs.

Saws with one long spring.

Saws with three C-springs.

NOTE! The clutch springs should not be opened out more than necessary. Risk of deformation.

Locate the clutch shoes on the hub and fit the springs with the help of pliers.

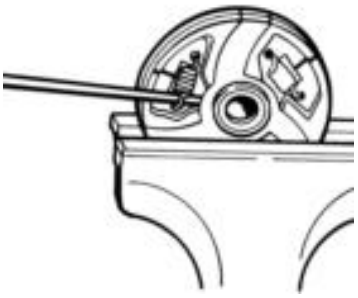

Locate the clutch shoes on the hub. Lift a shoe using a suitable spacer (A) and fit the spring.

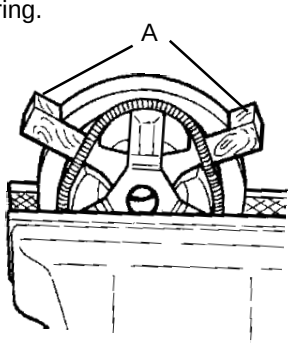

Locate the clutch shoes on the hub and fit the springs with the help of circlip pliers.

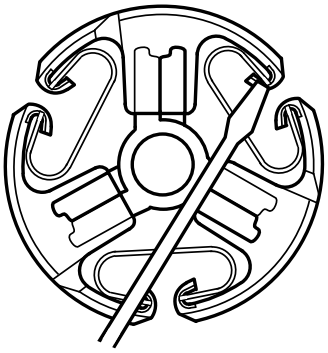

Using a spanner secure the clutch centre. On saws 36 and 41 use service tool no. 530 03 11-12.
Note! Left-hand thread.

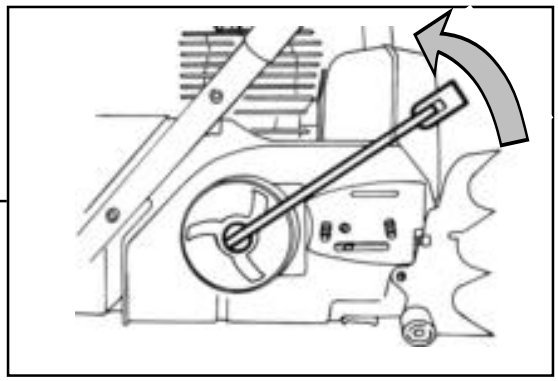

Remove the piston stop and fit the spark plug.

Fit the chain and bar. See the operating instructions. On 268K and 272K, fit the cutting attachment.
See the operating instructions.

Downloaded from www.Manualslib.com manuals search engine

Dismantling

Dismantle the following parts:
- Starter. See the operating instructions
- Centrifugal clutch. See page 67.

Saws 36, 40, 41, 45, 51 and 55. See page 72

Saw 3120. See page 72

Other saws.

Remove the pump drive and washer.

Undo the three bolts (A) and remove the oil pump. Some pumps have to be removed by using extractor screws. M5 screws should be inserted into the 2 threaded holes in the pump body and tightened equally to lift the pump and thrust washer. Other pumps have a cut-out (C) for a screwdriver to prise off the pump. Both types are shown below.

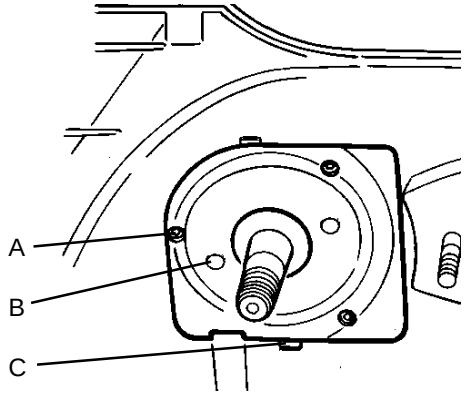

Saws 61, 268, 272XP. See next page.

Saws 281XP and 288 XP. See next page.

Saw 394. See page 72.

Saws 42, 242XP, 246, 254XP, 262XP and 257.

Dismantle the oil pump as follows:

1. Unscrew screw (A) and remove locking clip (B).
2. Undo screw (C).
3. Lever out the pump piston (D) and plastic plug (E) using a screwdriver.
4. Remove the seal (F).

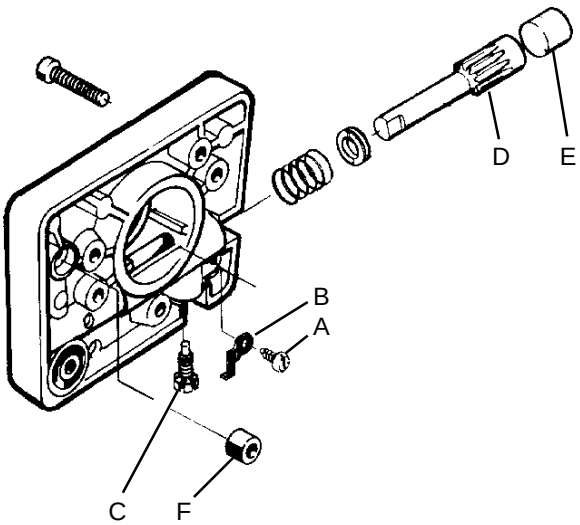

Downloaded from www.Manualslib.com manuals search engine

Saws 61, 268, 272XP.

Dismantle the oil pump as follows:

1. Remove the lock washer (A), washer, spring and adjuster screw (B).
2. Remove the locking lacquer and undo screw (C).
3. Knock the edge of the pump housing against a piece of wood so that the pump piston (D) slides out of the housing.
4. Remove the pinion (E) with washers and springs.
5. Remove the pin (F).
6. Remove the seal (G).
7. If necessary remove the O-ring (H).

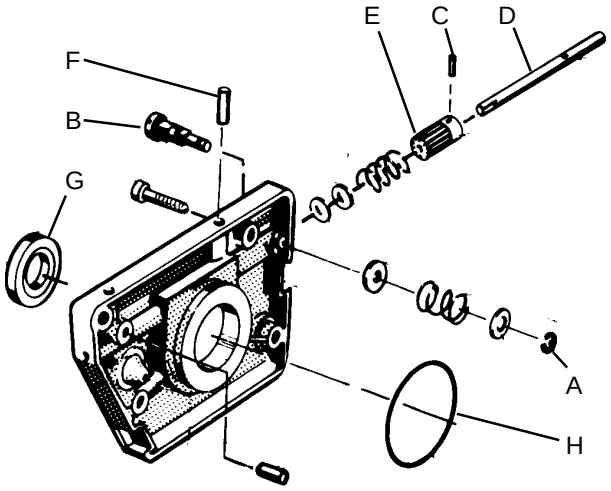

Saws 281XP and 288 XP.

Dismantle the oil pump as follows:

1. Undo the adjuster screw (A).
2. Remove the plug (B) with pump piston (C) and spring with washers.
3. Dismantle the O-ring (D). Replace if necessary.
4. If necessary, replace the seal (E).
5. If necessary, replace the O-ring (F).

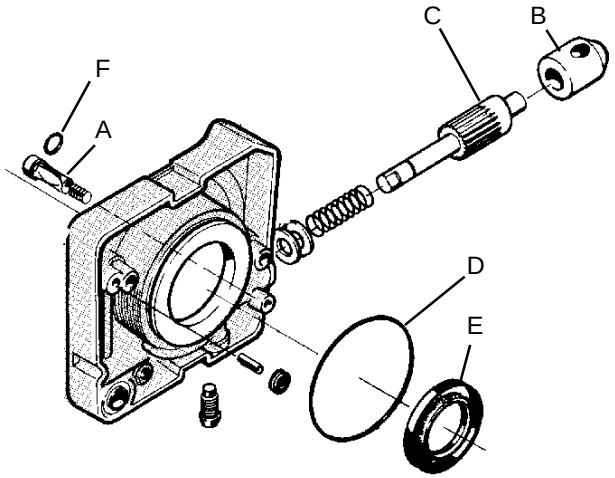

Downloaded from www.Manualslib.com manuals search engine

Saw 394.

Dismantle the oil pump as follows:

1. Dismantle the screw (A) so that the spring and latch pin (B) can be removed.
2. Lever out the pump piston (C) with the plastic plug (D) using a screwdriver.
3. Remove the seal (E).

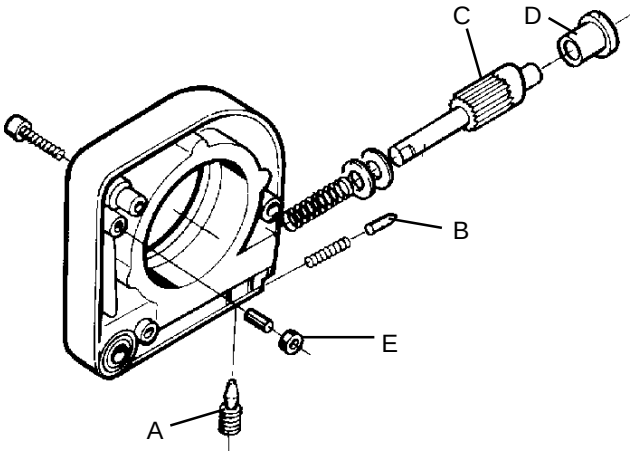

Saw 3120.

Undo the three bolts that hold the oil pump and lift up the pump by the cut-out for the adjuster screw. Lift off the pump and loosen the wire for manual oil supply.

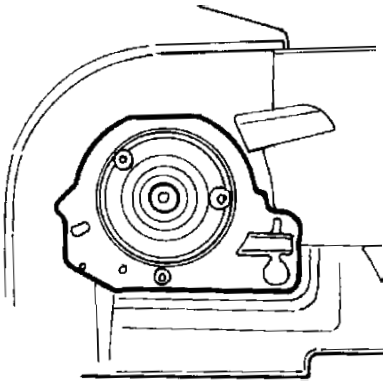

Dismantle the oil pump as follows:

1. Undo the screws (A) and remove the parts as shown in the figure below.
2. Undo screw (B). NOTE! Left-hand thread.

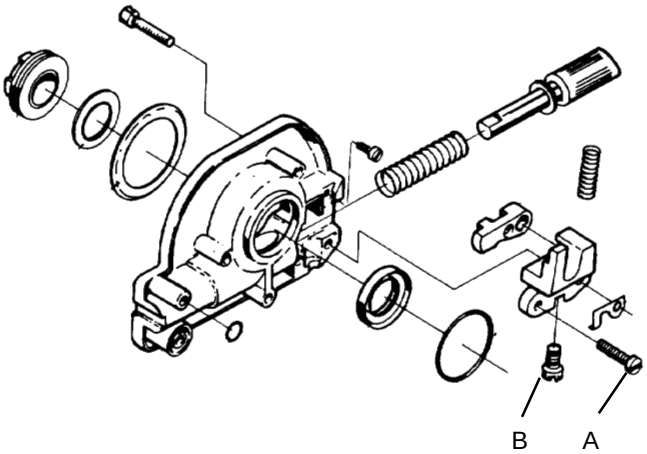

Downloaded from www.Manualslib.com manuals search engine

Saws 36, 40, 41, 45, 51 and 55.

Dismantle the chain guide plates as shown in respective diagrams below.

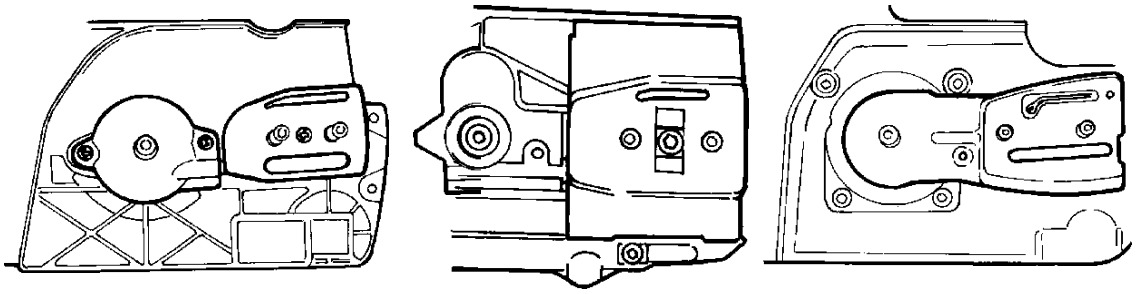

36/41 **40/45** **51/55**

Saws 36, 40, 41 and 45.

Undo the two bolts and lift off the pump and the upper seal.

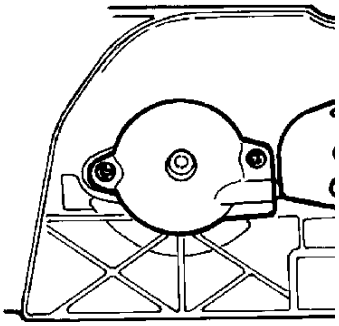

Saws 51 and 55.

Lift off the pump and the upper seal.

Take the pump apart as shown in the exploded view on the next page.

Downloaded from www.Manualslib.com manuals search engine

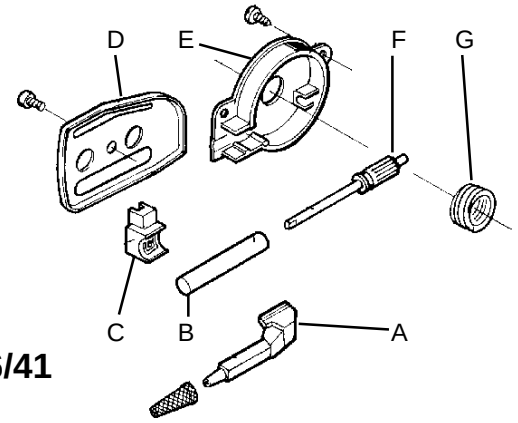

36/41

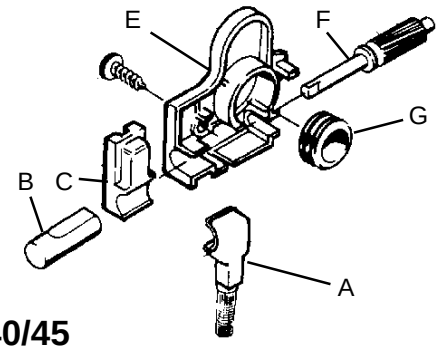

40/45

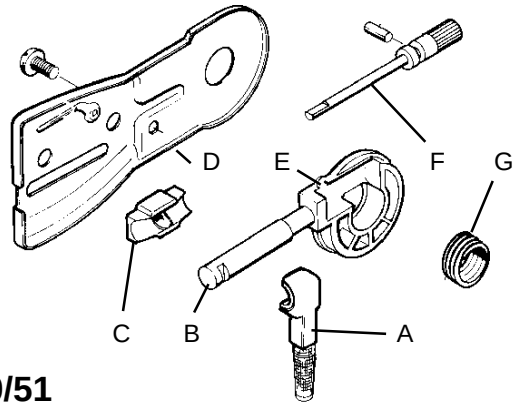

50/51

A. Lower seal.
B. Pump cylinder.
C. Upper seal.
D. Chain guide plate.
E. Pump housing.
F. Pump piston.
G. Worm gear.

Downloaded from www.Manualslib.com manuals search engine

Dismantling the oil pump's worm gear

On some saws the worm gear for the oil pump is pressed on the crankshaft.

Remove the worm gear by using the service tool for the saw in question. See "Tools".

First screw the tool onto the **entire** worm gear
Turn the screw until the worm gear is removed.

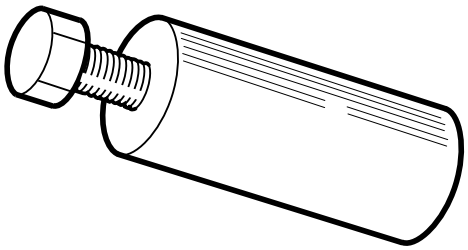

Downloaded from www.Manualslib.com manuals search engine

Cleaning and Inspection

Clean all parts and check the following when appropriate to the saw in question.

That the taper on the adjuster screw shows no signs of wear.

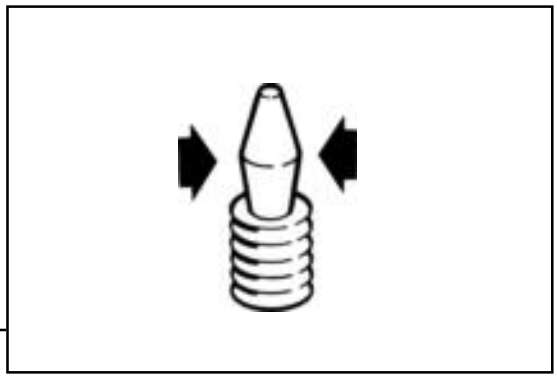

That the pump piston's eccentric face does not show signs of wear.

That the pump piston's pinion gear is undamaged.

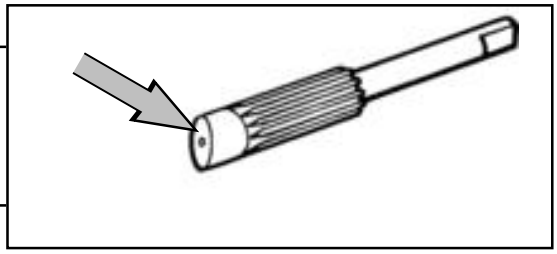

That the worm gear on the oil pump drive is undamaged.

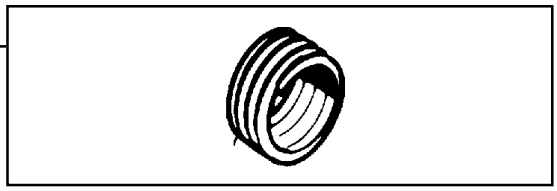

That all seals are undamaged.

The oil pipe is not blocked and the filter screen is clean.

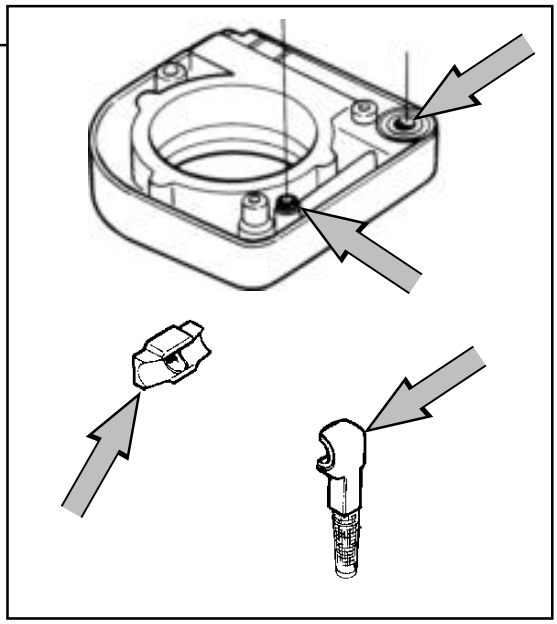

Downloaded from www.Manualslib.com manuals search engine

Assembling the worm gear

On those saws where the oil pump worm gear is pressed on the crankshaft.

Screw the worm gear into the dismantling tool and press the worm gear onto the crankshaft until it bottoms against the collar.

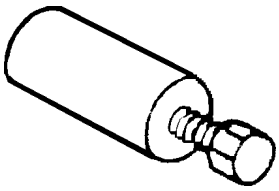

Assembling the oil pump

Saws 42, 242XP, 246, 254XP, 262XP and 257.

Fit the oil pump as follows:

1. Apply SAE 30 oil to all moving parts.
2. Insert the pump piston (D) with washers and spring.
3. Press in the pump piston a little more and screw in the adjuster screw (C).
4. Insert the plastic plug (E).
5. Refit screw (A) and locking clip (B).
6. Fit the seal (F).

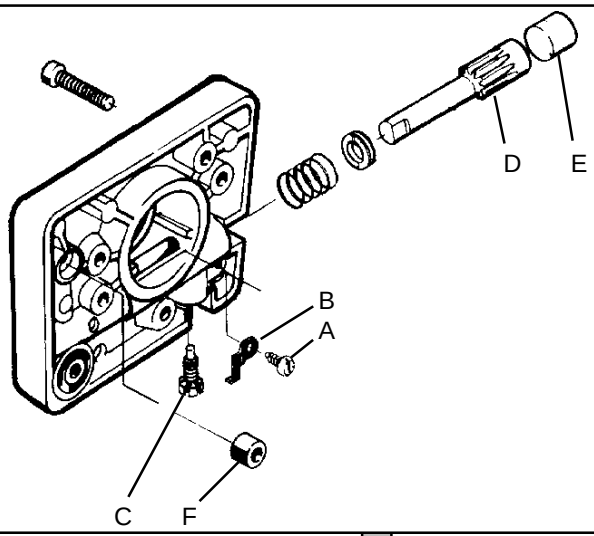

See continuation, page 80.

Saws 61, 268, 272XP.

Fit the oil pump as follows:

1. Apply SAE 30 oil to all moving parts.
2. Fit the seal (G) if necessary.
3. Press in pin (F).
4. Locate the pinion (E) with washers and spring.
5. Insert the pump piston (D) through the pinion, spring and washers in the pump housing.
6. Fit screw (C). The screw should be locked using Loctite or locking lacquer.
7. Fit the adjuster screw (I) with washers, spring and locking clip (A).
8. Fit the O-ring (H).

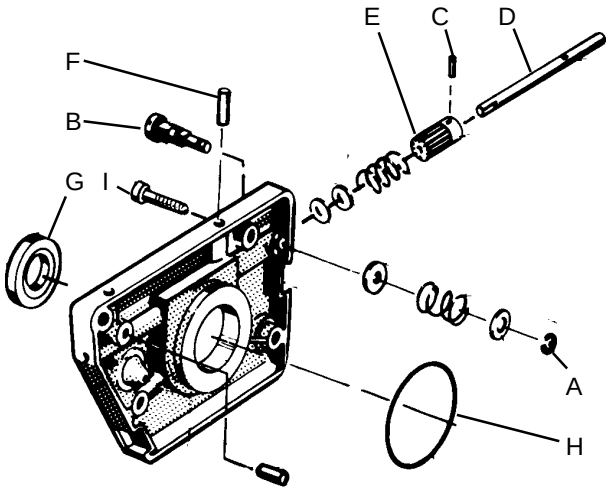

See continuation, page 80.

Downloaded from www.Manualslib.com manuals search engine

Saws 281XP and 288 XP.

Fit the oil pump as follows:

1. Apply SAE 30 oil to all moving parts
2. Fit the seal (E) if necessary.
3. Fit the plug (B) and spring with washers on the pump piston (C) and fit the unit in the pump housing.
4. Fit the adjuster screw (A) in the pump housing, and through the hole in plug (B).
5. Fit the O-rings (D) and (F).

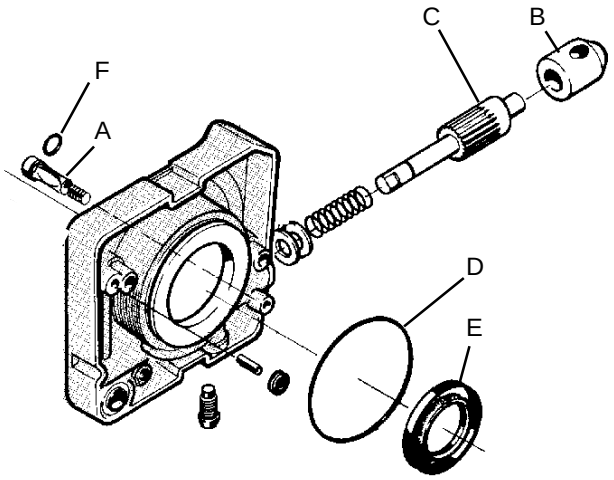

See continuation, page 80.

Saw 394.

Fit the oil pump as follows:

1. Apply SAE 30 oil to all moving parts.
2. Fit the pump piston (C) with washers and spring in the pump housing.
3. Fit the latch pin (B), press in the pump piston (C) a little more and fit the adjuster screw (A).
4. Fit the seal (E).
5. Fit the plug (D).

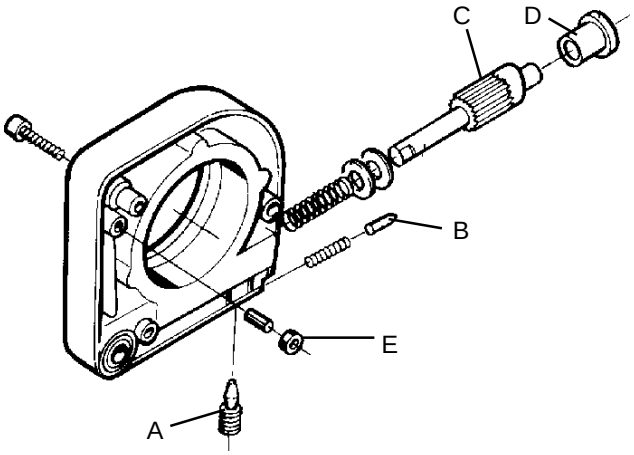

See continuation, page 80.

Downloaded from www.Manualslib.com manuals search engine

Saw 3120.

Fit the oil pump as follows:

1. Apply SAE 30 oil to all moving parts
2. Fit the seal (C).
3. Fit the pump piston (D) with spring. Press in the piston and hold it in position with a screwdriver from the pump housing's inside in slot (E).
4. Fit screw (B) so that it is positioned approx. one turn from the bottom. NOTE! Left-hand thread
5. Fit lever arm (F).
6. Fit units (B-F-G) with spring (H) and screw in position using screws (A) and latch (J).
7. Remove the screwdriver.
8. Fit a new O-rings (K) and (L).

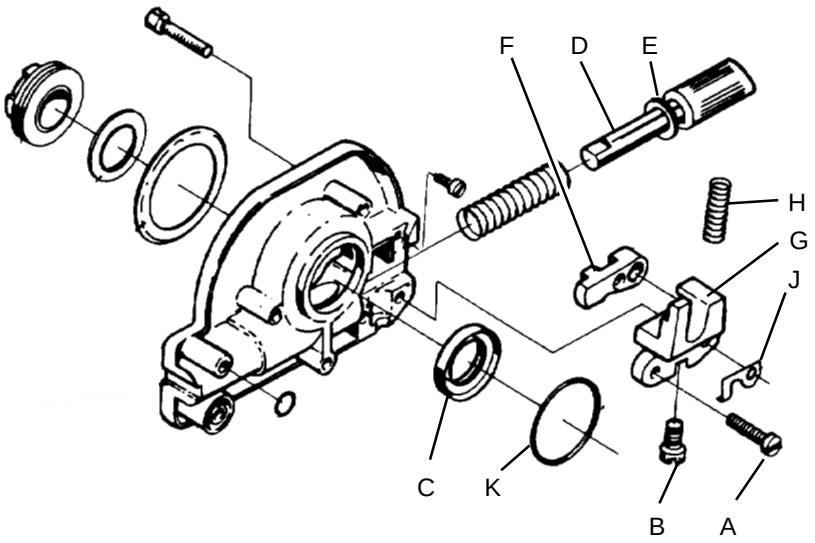

Fit the wire for manual oil supply.

See continuation on next page.

Downloaded from www.Manualslib.com manuals search engine

Saws 42, 61, 242, 246, 254, 257, 262, 268, 272, 281, 288, 394 and 3120.

Saws 61, 268, 272, 281 and 288

Use the tapered sleeve which is placed on the shaft when fitting the oil pump. Otherwise the seals will be damaged.

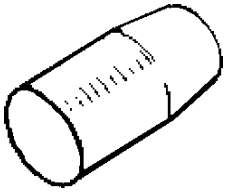

1. Lubricate the pinion gear with grease.
2. Fit the oil pump on the saw by tightening the three bolts.
3. If the tapered sleeve has been used, remove it.
4. Fit the centrifugal clutch. See page 69.
5. Fit the bar and chain.
6. Adjust the oil pump for the correct oil flow. See the operating instructions.

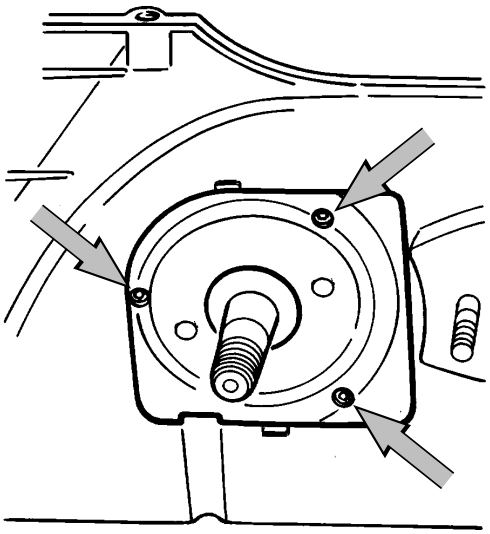

Downloaded from www.Manualslib.com manuals search engine

Saws 36, 40, 41, 45, 51 and 55.

Fit the oil pump as follows:

1. Apply SAE 30 oil to all moving parts.
2. Fit the worm gear (G) on the crankshaft, if necessary
3. Fit the pump piston (F) in the pump cylinder (B).
4. Fill the pump recess with grease.
5. Fit the unit in the pump housing (E). Ensure the pump cylinder's cut-out aligns in the pump housing.
6. Fit the lower seal (A) on the crankcase.

A. Lower seal.
B. Pump cylinder.
C. Upper seal.
D. Chain guide plate.
E. Pump housing.
F. Pump piston.
G. Worm gear

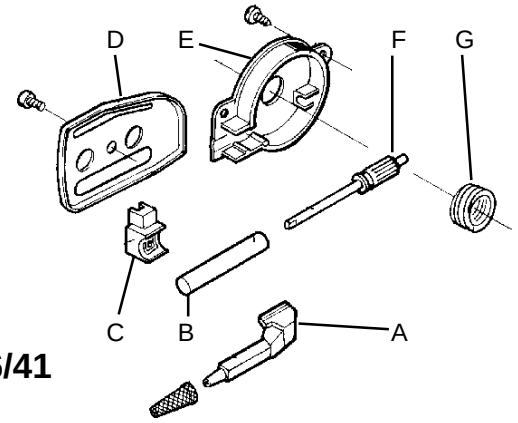

36/41

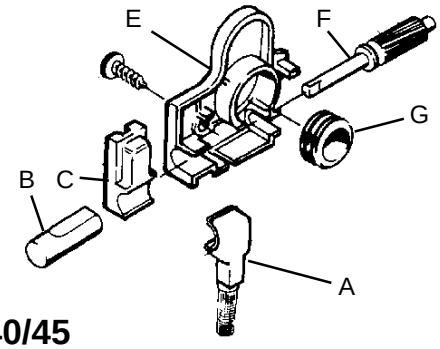

40/45

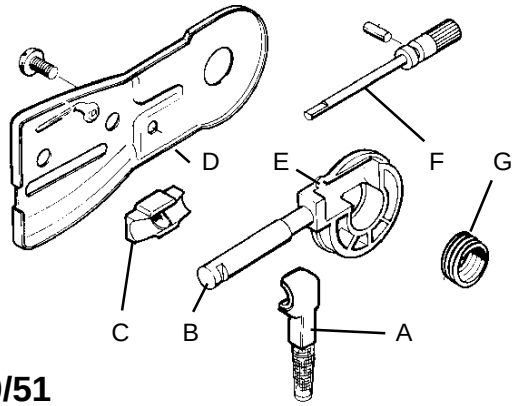

50/51

Saws 36, 40, 41 and 45, see continuation on the next page.

Saws 51 and 55, see continuation on the next page.

Downloaded from www.Manualslib.com manuals search engine

LUBRICATION SYSTEM

Saws 36, 40, 41 and 45.

Fit the oil pump in the crankcase, tighten the two bolts and fit the upper seal.

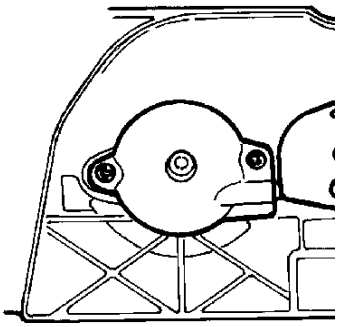

Saws 51 and 55.

Fit the oil pump in the crankcase and fit the upper seal.

Fit the chain guide plates according to respective diagrams below.

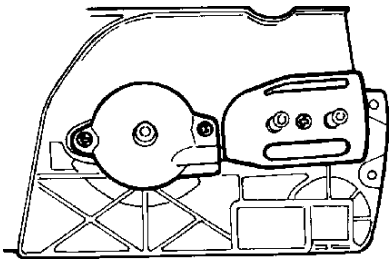

36/41

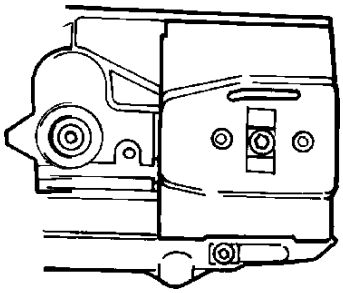

40/45

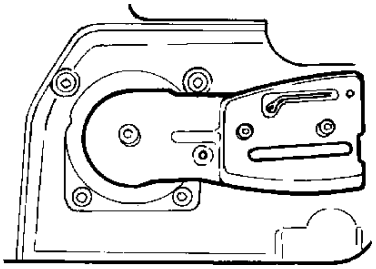

51/55

Fit the bar and chain.

Downloaded from www.Manualslib.com manuals search engine

CARBURETTOR

Description

The diagrams in this description do not correspond with the carburettor fitted on the chain saws. They serve only to show the principles of design and operation.

WARNING!
The fuel used in the chain saw poses the following hazards:
1. The liquid and its vapours are poisonous.
2. Can cause skin irritation.
3. Is highly inflammable.

Design

The carburettor consists of three sub-systems:

- Metering unit, A.
- Mixing venturi, B.
- Pump unit, C.

The metering unit (A) contains the jets and fuel control functions. It is here the correct amount of fuel for the given engine speed and power is metered.

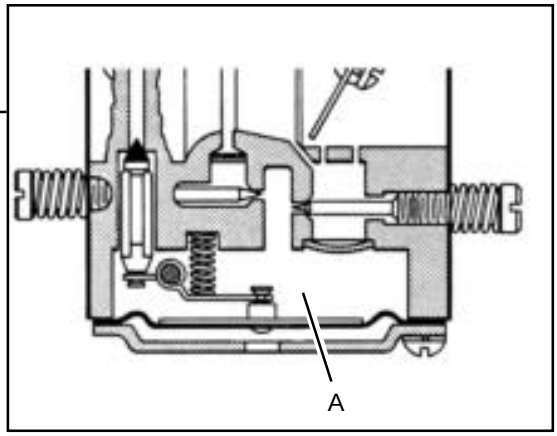

The mixing venturi (B) houses the choke, throttle valve and diffuser jets. Here air is mixed with the fuel to give a fuel/air mixture that can be ignited by the ignition spark.

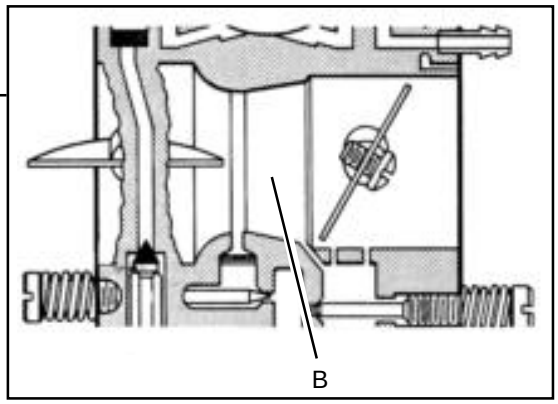

In the pump unit (C), fuel is pumped from the fuel tank to the metering unit. One side of the pump diaphragm is connected to the crankcase and pulses in time with the pressure changes in the crankcase. The other side of the diaphragm pumps the fuel.

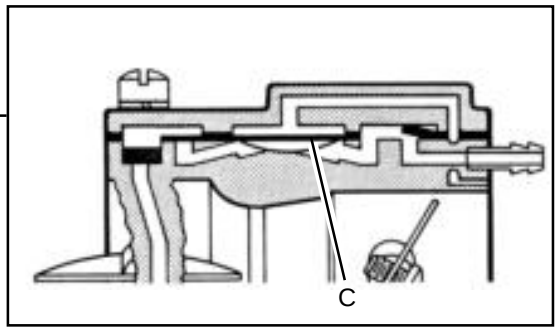

Downloaded from www.Manualslib.com manuals search engine

Operation

The carburettor operates differently in the following modes:
- Cold start
- Idling
- Part throttle
- Full throttle

In the cold start mode the choke valve (D) is fully closed. This increases the vacuum in the carburettor and fuel is easier to suck from all the diffuser jets (E, F and G). The throttle valve (H) is partly open.

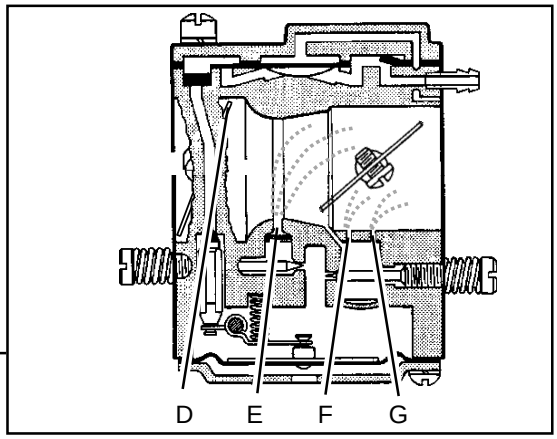

In the idling mode (H) the throttle valve is closed. Air is sucked in through an aperture in the throttle valve and a small amount of fuel is supplied through the diffuser jet (G).

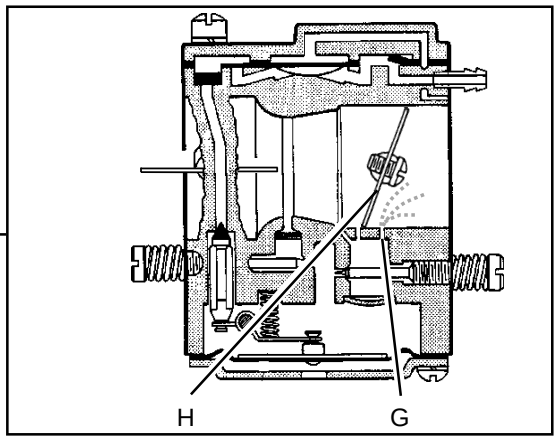

In the part throttle mode the throttle valve (H) is partially open. Fuel is supplied through the diffuser jets (F and G).

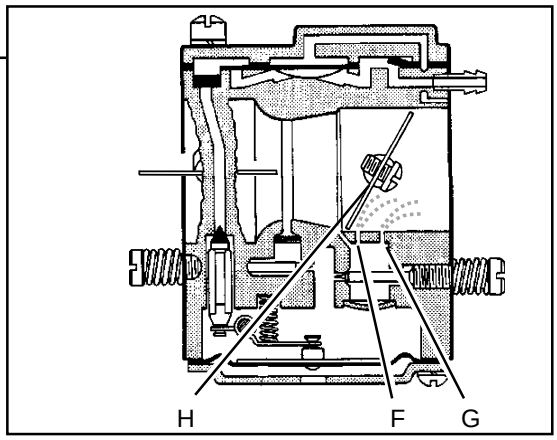

In the full throttle mode both valves are open and fuel is supplied through all three diffuser jets (E, F and G).

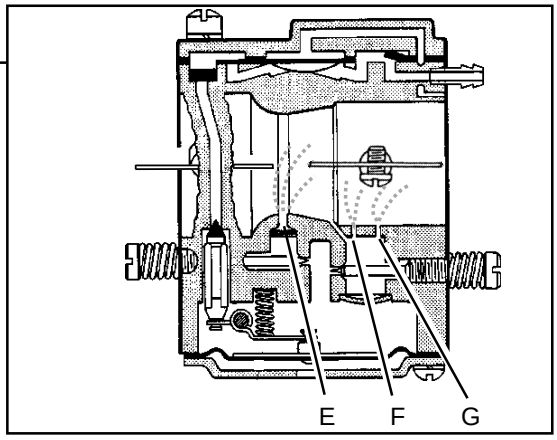

Downloaded from www.Manualslib.com manuals search engine

Dismantling

WARNING!
The fuel used in the chain saw poses the following hazards:
1. The liquid and its vapours are poisonous.
2. Can cause skin irritation.
3. Is highly inflammable.

Dismantle all parts necessary and remove the carburettor from the saw. On some models the cylinder needs to be loosened and lifted to be able to remove the carburettor.

See the carburettor in question on the next four pages and the instructions below.

Plugs

When cleaning the carburettor the plugs must be removed. Remove as follows:

1. Drill a hole in the plug.

2. Insert a screwdriver or punch in the hole and prise up the plug.

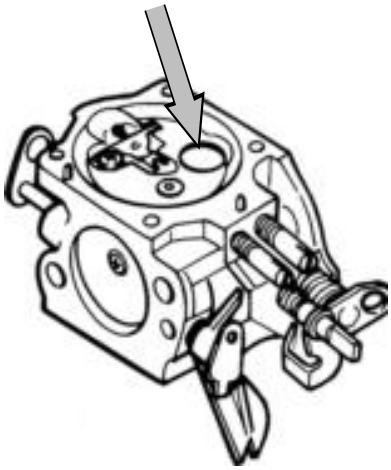

”Semi fixed jet”/”fixed jet”

Some carburettors have an extra jet (semi fixed jet). The jet is of brass and is located in the metering unit and is used to give a fuel supplement. On average 10% of the fuel passes through the jet.
Below or next to the jet is a screen which needs to be cleaned.

Dismantle the jet and/or screen in one of the following ways:

1. Knock the unit into the venturi using a punch and take the unit apart. (some Tillotson models).

2. Dismantle the lock washer over the jet and lift off the jet and screen.

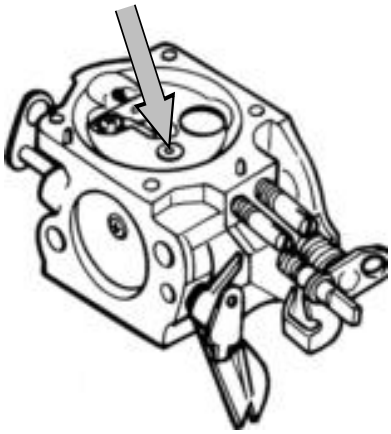

Downloaded from www.Manualslib.com manuals search engine

Tillotson HS 228 B

1. Remove the cover (A) over the metering unit and carefully remove the control diaphragm (B) with the gasket.
2. Undo the screw (H) and take out the needle valve (C) with lever arm, shaft and spring.
3. Remove the cover (E) over the pump unit and carefully remove the gasket (F) and the pump diaphragm (G).
4. Using a needle or the like carefully remove the fuel screen (D).
5. Unscrew the high and low speed jet screws.
6. Remove the plugs (J). See page 85.
7. If necessary remove the throttle and choke valves as well as the shafts, lever arms and springs.

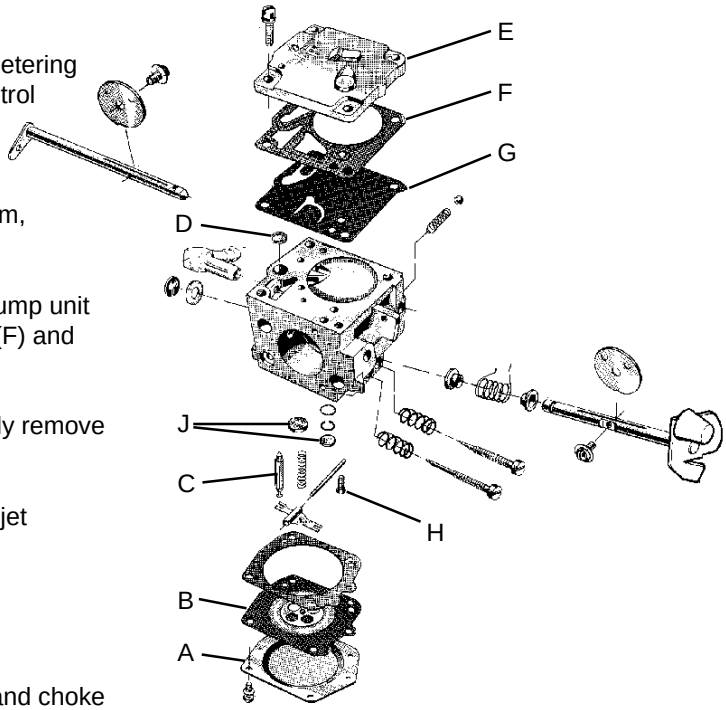

Tillotson HS 255 B

1. Remove the cover (A) over the metering unit and carefully remove the control diaphragm (B) with the gasket.
2. Undo the screw (H) and take out the needle valve (C) with lever arm, shaft and spring.
3. Remove the cover (E) over the pump unit and carefully remove the gasket (F) and the pump diaphragm (G).
4. Using a needle or the like carefully remove the fuel screen (D).
5. Unscrew the high and low speed jet screws.
6. Remove the plugs (J). See page 85.
7. If necessary remove the throttle and choke valves as well as the shafts, lever arms and springs.
8. Remove the speed governor (I). (Only 272K, 268K and 272S).
9. Remove the ”semi fixed jet” (K). See page 85.

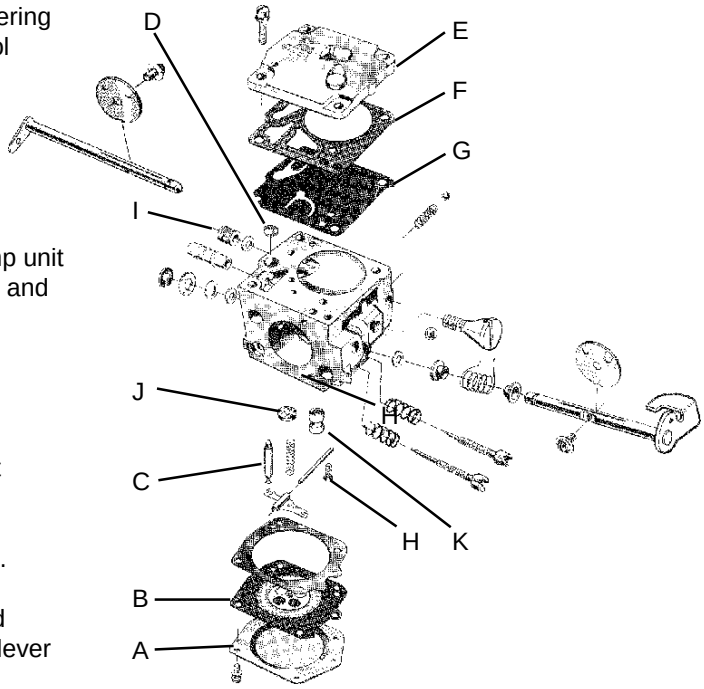

Downloaded from www.Manualslib.com manuals search engine

Tillotson HS 260 A

1. Remove the cover (A) over the metering unit and carefully remove the control diaphragm (B) with the gasket.
2. Undo the screw (H) and take out the needle valve (C) with lever arm, shaft and spring.
3. Remove the cover (E) over the pump unit and carefully remove the gasket (F) and the pump diaphragm (G).
4. Using a needle or the like carefully remove the fuel screen (D).
5. Unscrew the high and low speed jet screws.
6. Remove the plugs (J). See page 85.
7. If necessary remove the throttle and choke valves as well as the shafts, lever arms and springs.
8. Remove the ”semi fixed jet” (K). See page 85.

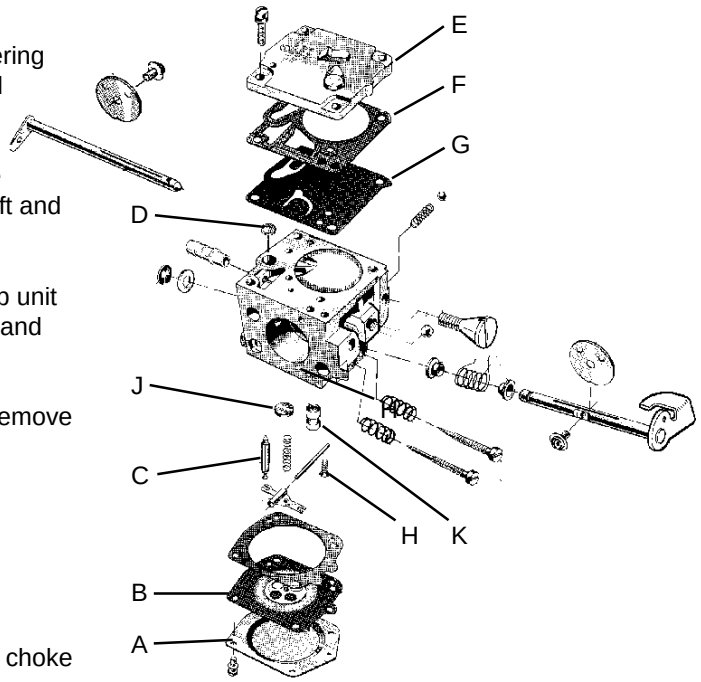

Walbro HDA and HD

1. Remove the cover (A) over the metering unit and carefully remove the control diaphragm (B) with the gasket.
2. Undo the screw (H) and take out the needle valve (C) with lever arm, shaft and spring.
3. Remove the cover (E) over the pump unit and carefully remove the gasket (F) and the pump diaphragm (G).
4. Using a needle or the like carefully remove the fuel screen (D).
5. Unscrew the high and low speed jet screws.
6. Remove the plug (J). See page 85.
7. If necessary remove the throttle and choke valves as well as the shafts, lever arms and springs.

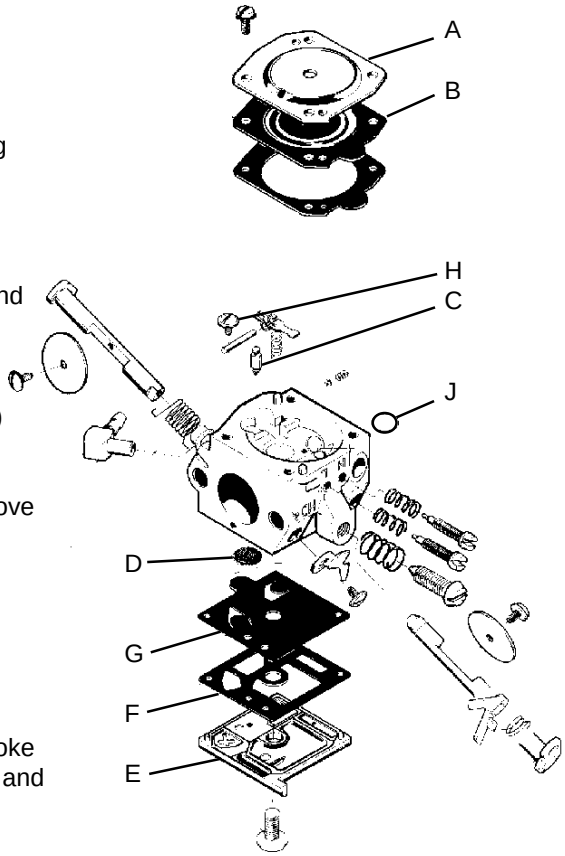

Downloaded from www.Manualslib.com manuals search engine

Walbro WJ

1. Remove the cover (A) over the metering unit and carefully remove the control diaphragm (B) with the gasket.
2. Undo the screw (H) and take out the needle valve (C) with lever arm, shaft and spring.
3. Remove the cover (E) over the pump unit and carefully remove the gasket (F) and the pump diaphragm (G).
4. Using a needle or the like carefully remove the fuel screen (D).
5. Unscrew the high and low speed jet screws.
6. Remove the plug (J). See page 85.
7. If necessary remove the throttle and choke valves as well as the shafts, lever arms and springs.
8. Remove the ”semi fixed jet” (K). See page 85.

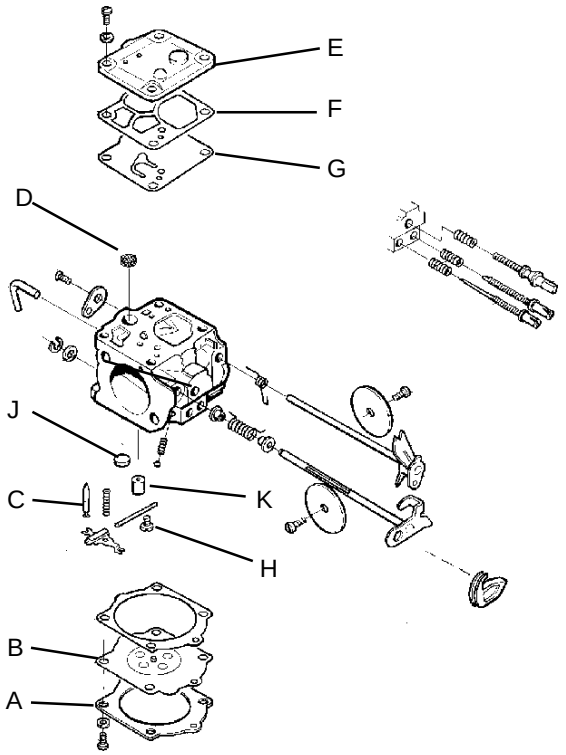

Walbro WG

1. Remove the cover (A) over the metering unit and carefully remove the control diaphragm (B) with the gasket.
2. Undo the screw (H) and take out the needle valve (C) with lever arm, shaft and spring.
3. Remove the cover (E) over the pump unit and carefully remove the gasket (F) and the pump diaphragm (G).
4. Using a needle or the like carefully remove the fuel screen (D).
5. Unscrew the low speed jet screws.
6. Remove the plugs (J). See page 85.
7. If necessary remove the throttle and choke valves as well as the shafts, lever arms and springs.
8. Remove the ”semi fixed jet” (K). See page 85.

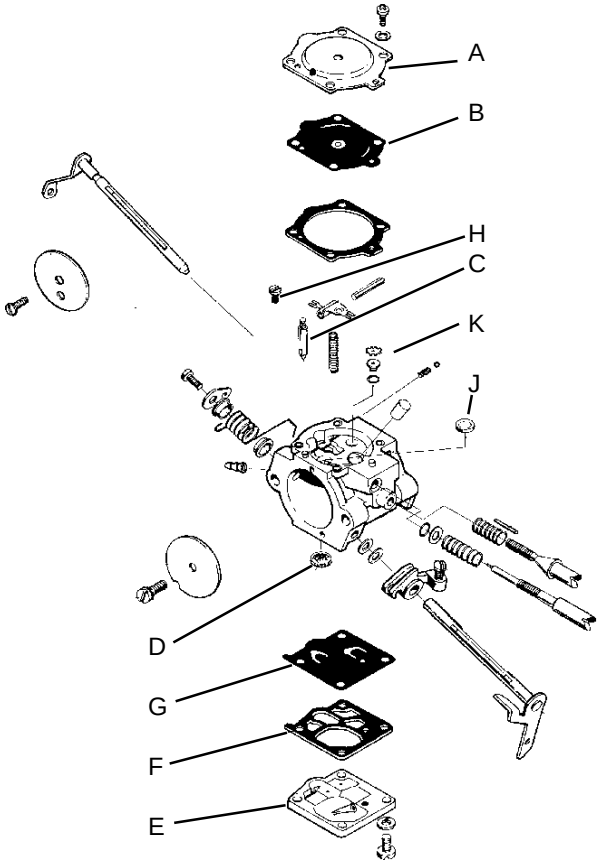

Downloaded from www.Manualslib.com manuals search engine

Walbro WT

1. Remove the cover (A) over the metering unit and carefully remove the control diaphragm (B) with the gasket.
2. Undo the screw (H) and take out the needle valve (C) with lever arm, shaft and spring.
3. Remove the cover (E) over the pump unit and carefully remove the gasket (F) and the pump diaphragm (G).
4. Using a needle or the like carefully remove the fuel screen (D).
5. Unscrew the high and low speed jet screws.
6. Remove the plug (J). See page 85.
7. If necessary remove the throttle and choke valves as well as the shafts, lever arms and springs.
8. Remove the ”semi fixed jet” with diffuser jet (K). See page 85.

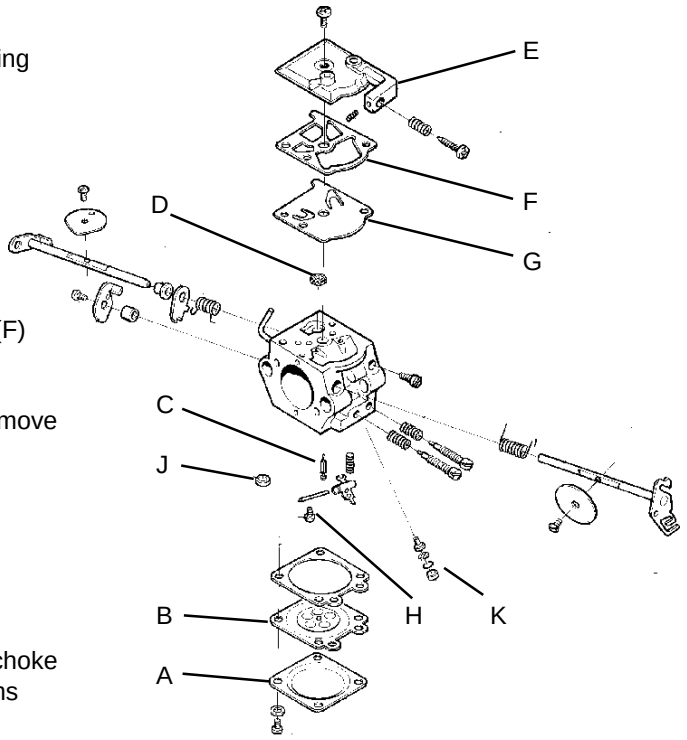

ZAMA C1Q-EL1

1. Remove the cover (A) over the metering unit and carefully remove the control diaphragm (B) with the gasket.
2. Undo the screw (H) and take out the needle valve (C) with lever arm, shaft and spring.
3. Remove the cover (E) over the pump unit and carefully remove the gasket (F) and the pump diaphragm (G).
4. Using a needle or the like carefully remove the fuel screen (D).
5. Unscrew the high and low speed jet screws.
6. If necessary remove the throttle and choke valves as well as the shafts, lever arms and springs.

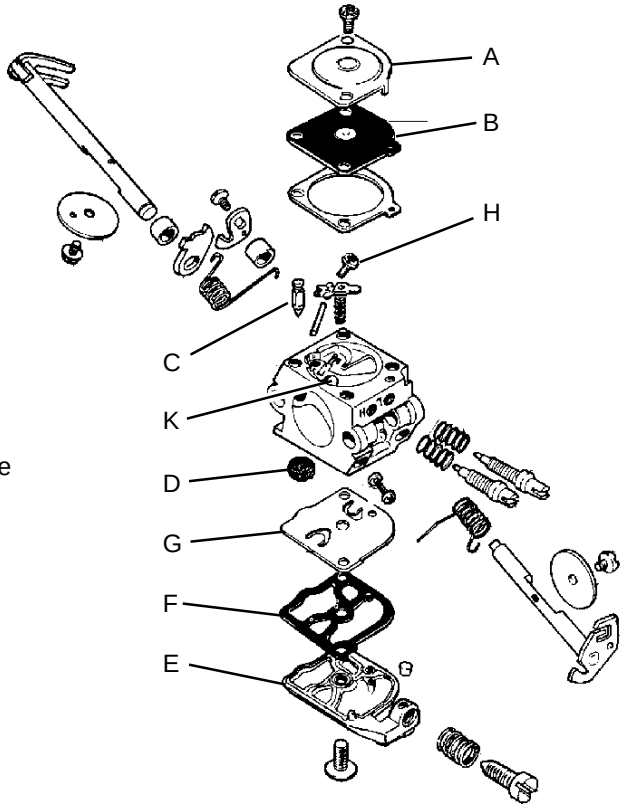

Downloaded from www.Manualslib.com manuals search engine

Cleaning and Inspection

WARNING!
The fuel used in the chain saw poses the following hazards:
1. The liquid and its vapours are poisonous.
2. Can cause skin irritation.
3. Is highly inflammable.

Clean all components in petrol. Wear gloves or skin protection cream.

WARNING!
Never direct the compressed air jet towards the body. Air can be forced into the blood stream and can cause fatality.

Use compressed air to dry the petrol on the components. Direct the air through all channels in the carburettor housing and ensure that they are not blocked.

Refer to the carburettor diagram in question on the previous pages and check the following:

1. That the gasket and pump and control diaphragms are undamaged.
2. That there is no play on the throttle and choke valve shafts.
3. That the needle valve and its lever are not worn.
4. That the fuel screen is undamaged
5. That the tips of the high and low speed jet screws are not damaged.
6. On Tillotson HS 255 B, that the speed governor (I) is clean.
7. That the air intake manifold is not cracked.

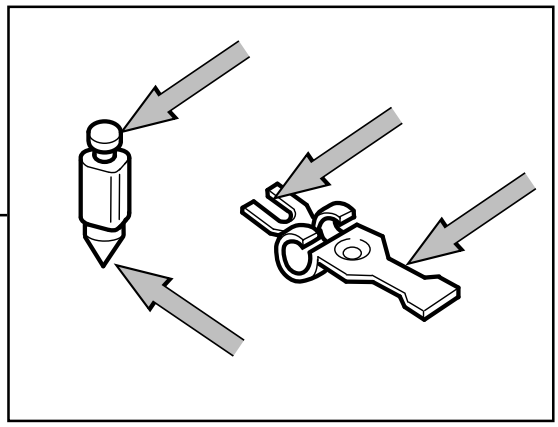

Downloaded from www.Manualslib.com manuals search engine

Assembly

Refer to the carburettor in question on the next eight pages. A pressure test, see page 100, should be carried out after assembling and before the carburettor is refitted to the saw.

WARNING!
The fuel used in the chain saw poses the following hazards:
1. The fluid and its vapours are poisonous.
2. Can cause skin irritation.
3. Is highly inflammable.

Plugs

When cleaning the carburettor the plugs must be removed.
Reassemble as follows:

1. Place the plug in the hole with the convex side facing upwards.

2. Expand the plug by using a punch on the top side.

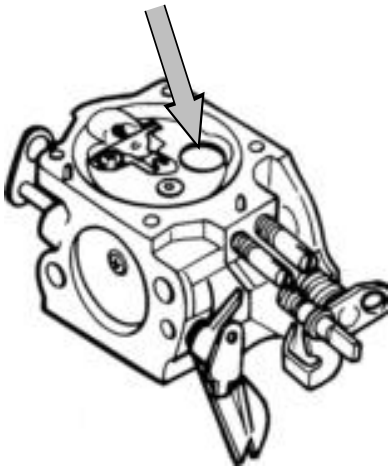

”Semi fixed jet”/”fixed jet”

Some carburettors have an extra jet (semi fixed jet). The jet is of brass and is located in the metering unit and is used to give a fuel supplement. On average 10% of the fuel passes through the jet.
Below or next to the jet is a screen which needs to be cleaned.

Reassemble the jet and/or screen in one of the following ways:

1. Put together the unit and fit it in the carburettor by means of a punch (Some Tillotson models).

2. Fit the jet with screen and lock washer.

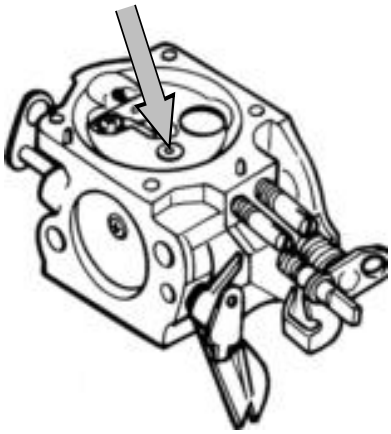

Downloaded from www.Manualslib.com manuals search engine

Tillotson HS 228 B

Maintain a high level of cleanliness when reassembling the carburettor. Even small particles of dirt can cause operating problems.

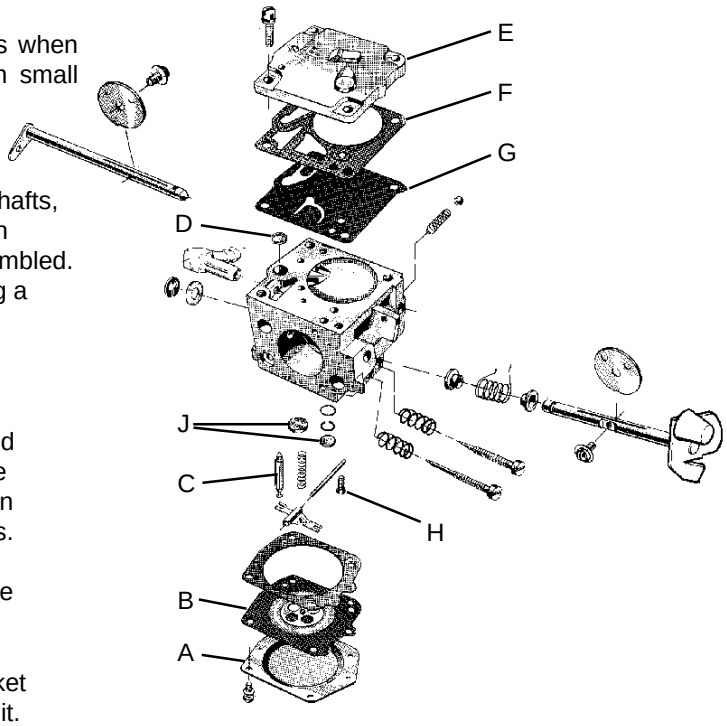

1. If the throttle and choke valves, shafts, lever arms and springs have been dismantled these must be reassembled. Lubricate the shaft bearings using a light oil.

2. Fit the plugs (J). See page 91.

3. Fit the high and low jet screws and springs. NOTE! Do not tighten the screws against the seats. This can damage the seats and needle tips.

4. Fit the fuel screen (D) by using the handle of a small screwdriver.

5. Fit the pump diaphragm (G), gasket (F) and cover (E) on the pump unit.

6. Fit the needle valve (C) with lever arm, shaft and spring and tighten screw (H).

7. Check, using or a ruler or the like, that the lever arm is level with the chamber floor. See the figure to the lower right. The lever arm can be bent if necessary to achieve the correct settings.

8. Fit the control diaphragm (B) with gasket and cover (A) on the metering unit.

9. Carry out a pressure test. See page 100.

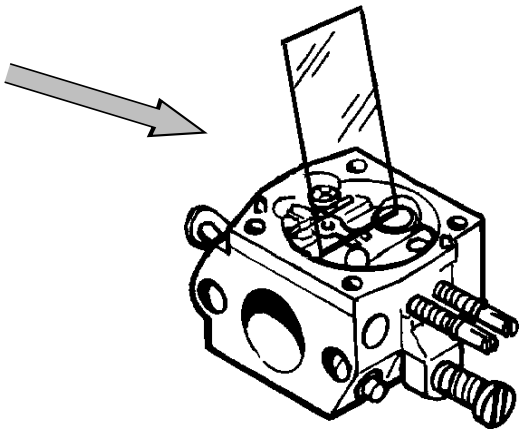

Downloaded from www.Manualslib.com manuals search engine

Tillotson HS 255 B

Maintain a high level of cleanliness when reassembling the carburettor. Even small particles of dirt can cause operating problems.

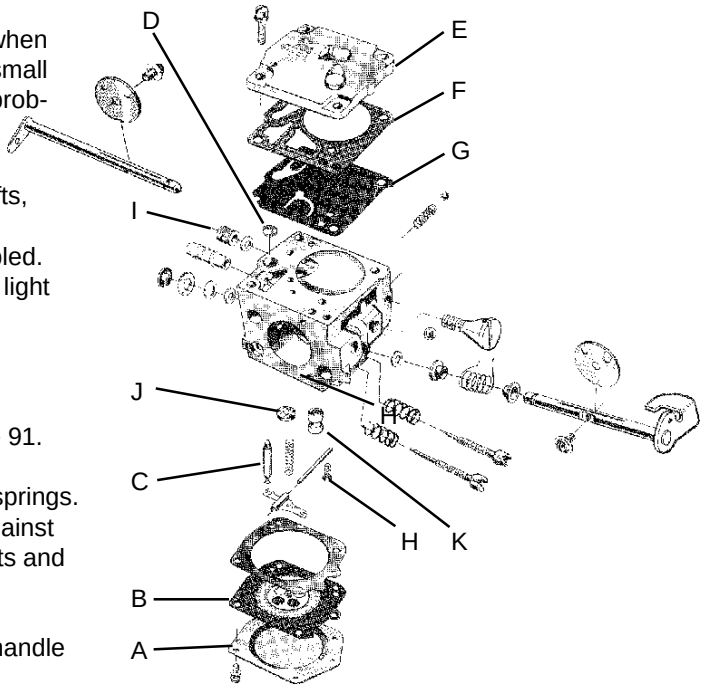

1. If the throttle and choke valves, shafts, lever arms and springs have been dismantled these must be reassembled. Lubricate the shaft bearings using a light oil.

2. Fit the plugs (J). See page 91.

3. Fit the ”semi fixed jet” (K). See page 91.

4. Fit the high and low jet screws and springs. NOTE! Do not tighten the screws against the seats. This can damage the seats and needle tips.

5. Fit the fuel screen (D) by using the handle of a small screwdriver.

6. Fit the pump diaphragm (G), gasket (F) and cover (E) on the pump unit.

7. Fit the needle valve (C) with lever arm, shaft and spring and tighten screw (H).

8. Check, using or a ruler or the like, that the lever arm is level with the chamber floor. See the figure to the lower right. The lever arm can be bent if necessary to achieve the correct settings.

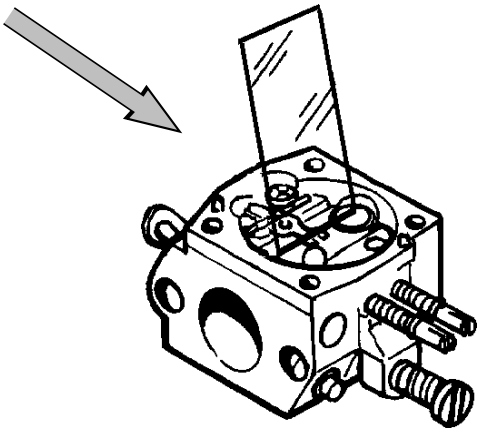

9. Fit the speed governor (I). Lock with Loctite or locking lacquer. (Only applies to 272K, 268K and 272S).

10. Fit the control diaphragm (B) with gasket and cover (A) on the metering unit.

11. Carry out a pressure test. See page 100.

Downloaded from www.Manualslib.com manuals search engine

Tillotson HS 260 A

Maintain a high level of cleanliness when reassembling the carburettor. Even small particles of dirt can cause operating problems.

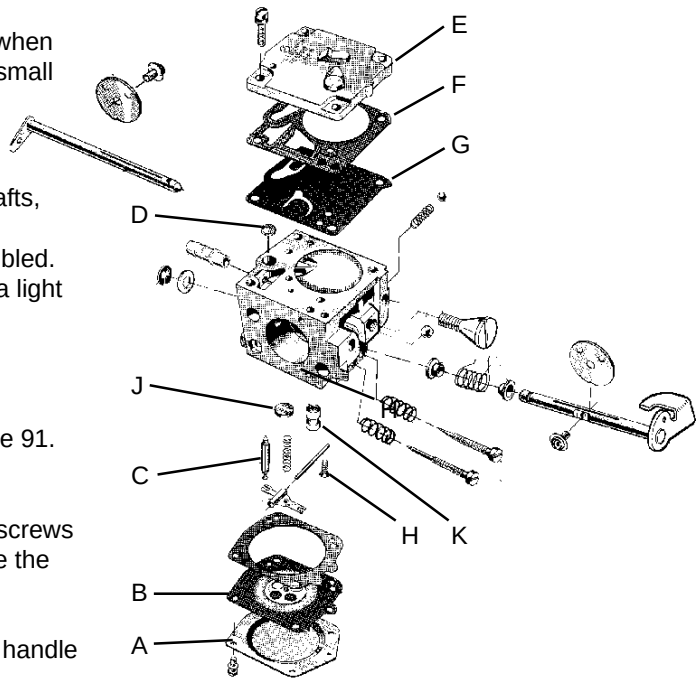

1. If the throttle and choke valves, shafts, lever arms and springs have been dismantled these must be reassembled. Lubricate the shaft bearings using a light oil.

2. Fit the plugs (J). See page 91.

3. Fit the ”semi fixed jet” (K). See page 91.

4. Fit the high and low jet screws and springs. NOTE! Do not tighten the screws against the seats. This can damage the seats and needle tips.

5. Fit the fuel screen (D) by using the handle of a small screwdriver.

6. Fit the pump diaphragm (G), gasket (F) and cover (E) on the pump unit.

7. Fit the needle valve (C) with lever arm, shaft and spring and tighten screw (H).

8. Check, using or a ruler or the like, that the lever arm is level with the chamber floor. See the figure to the lower right. The lever arm can be bent if necessary to achieve the correct settings.

9. Fit the control diaphragm (B) with gasket and cover (A) on the metering unit.

10. Carry out a pressure test. See page 100.

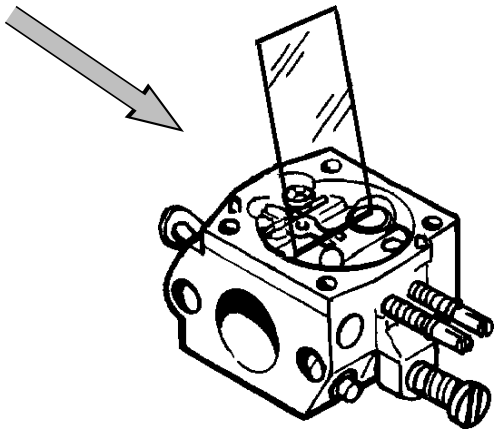

Downloaded from www.Manualslib.com manuals search engine

Walbro HDA och HD

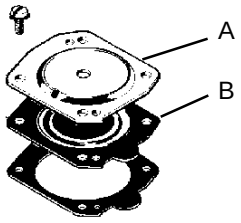

Maintain a high level of cleanliness when reassembling the carburettor. Even small particles of dirt can cause operating problems.

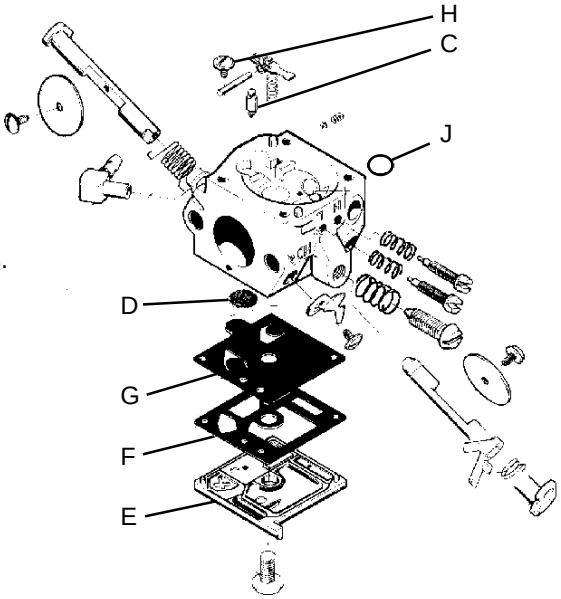

1. If the throttle and choke valves, shafts, lever arms and springs have been dismantled these must be reassembled. Lubricate the shaft bearings using a light oil.

2. Fit the plugs (J). See page 91.

3. Fit the high and low jet screws and springs. NOTE! Do not tighten the screws against the seats. This can damage the seats and needle tips.

4. Fit the fuel screen (D) by using the handle of a small screwdriver.

5. Fit the pump diaphragm (G), gasket (F) and cover (E) on the pump unit.

6. Fit the needle valve (C) with lever arm, shaft and spring and tighten screw (H).

7. Check, using or a ruler or the like, that the lever arm is level with the chamber floor. See the figure to the lower right. The lever arm can be bent if necessary to achieve the correct settings.

8. Fit the control diaphragm (B) with gasket and cover (A) on the metering unit.

9. Carry out a pressure test. See page 100.

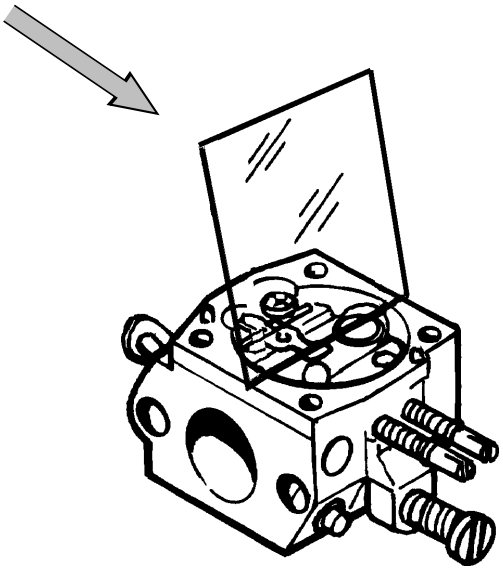

Downloaded from www.Manualslib.com manuals search engine

Walbro WJ

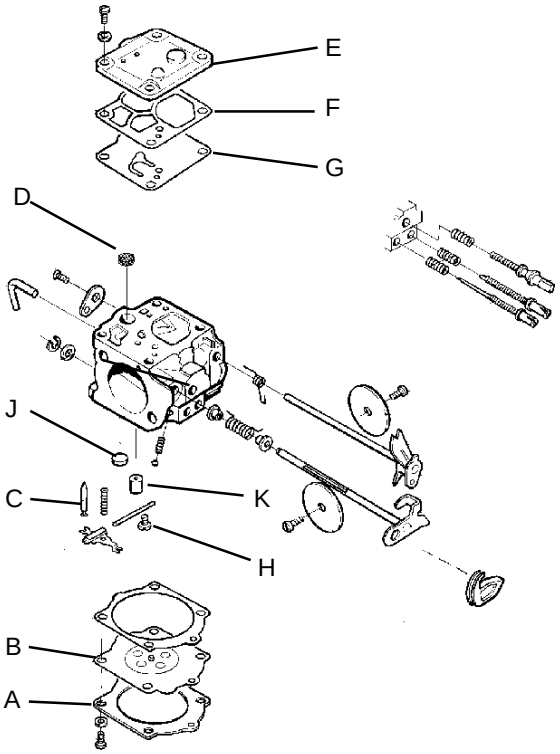

Maintain a high level of cleanliness when reassembling the carburettor. Even small particles of dirt can cause operating problems.

1. If the throttle and choke valves, shafts, lever arms and springs have been dismantled these must be reassembled. Lubricate the shaft bearings using a light oil.
2. Fit the plugs (J). See page 91.
3. Fit the ”semi fixed jet” (K). See page 91.
4. Fit the high and low jet screws and springs. NOTE! Do not tighten the screws against the seats. This can damage the seats and needle tips.
5. Fit the fuel screen (D) by using the handle of a small screwdriver.
6. Fit the pump diaphragm (G), gasket (F) and cover (E) on the pump unit.
7. Fit the needle valve (C) with lever arm, shaft and spring and tighten screw (H).
8. Check, using or a ruler or the like, that the lever arm is level with the chamber floor. See the figure to the lower right. The lever arm can be bent if necessary to achieve the correct settings.
9. Fit the control diaphragm (B) with gasket and cover (A) on the metering unit.
10. Carry out a pressure test. See page 100.

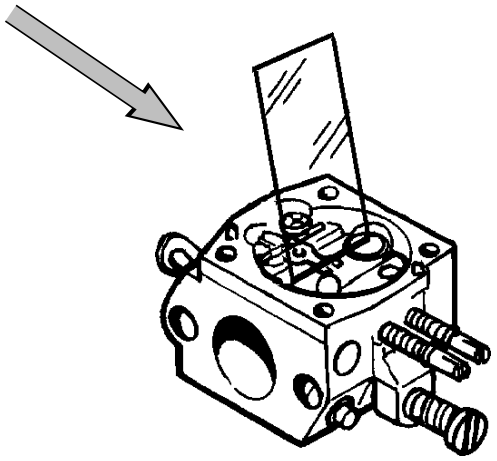

Downloaded from www.Manualslib.com manuals search engine

Walbro WG

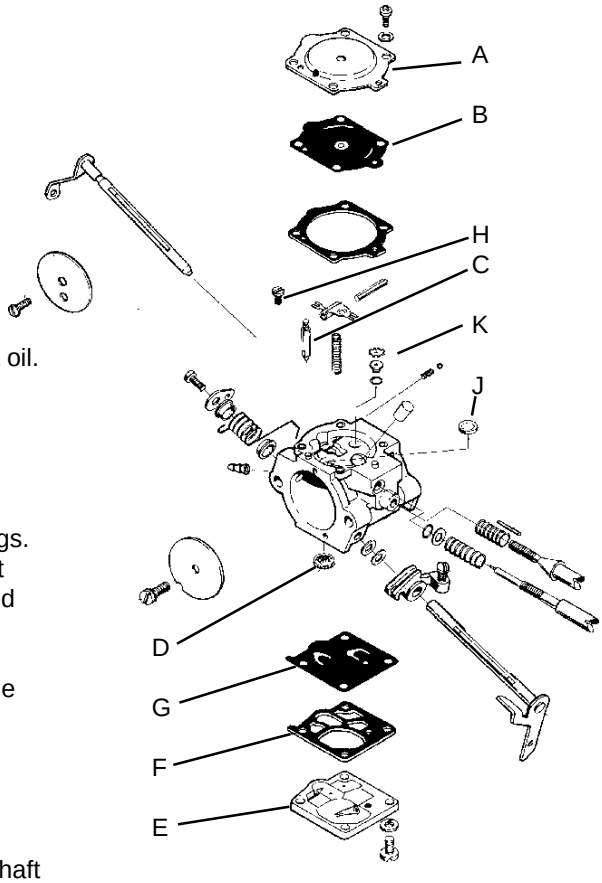

Maintain a high level of cleanliness when reassembling the carburettor. Even small particles of dirt can cause operating problems.

1. If the throttle and choke valves, shafts, lever arms and springs have been dismantled these must be reassembled. Lubricate the shaft bearings using a light oil.
2. Fit the plugs (J). See page 91.
3. Fit the ”fixed jet” (K). See page 91.
4. Fit the high and low jet screws and springs. NOTE! Do not tighten the screws against the seats. This can damage the seats and needle tips.
5. Fit the fuel screen (D) by using the handle of a small screwdriver.
6. Fit the pump diaphragm (G), gasket (F) and cover (E) on the pump unit.
7. Fit the needle valve (C) with lever arm, shaft and spring and tighten screw (H).
8. Check, using or a ruler or the like, that the lever arm is level with the chamber floor. See the figure to the lower right. The lever arm can be bent if necessary to achieve the correct settings.
9. Fit the control diaphragm (B) with gasket and cover (A) on the metering unit.
10. Carry out a pressure test. See page 100.

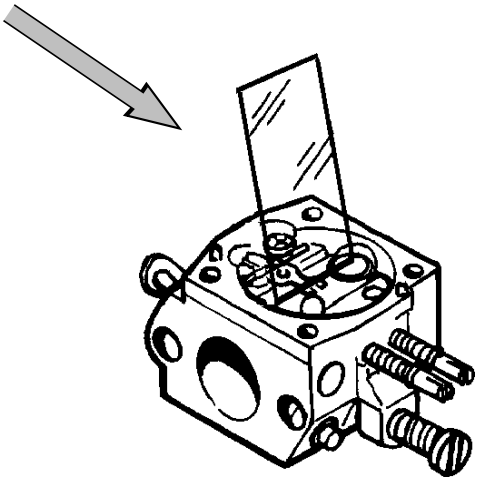

Downloaded from www.Manualslib.com manuals search engine

Walbro WT

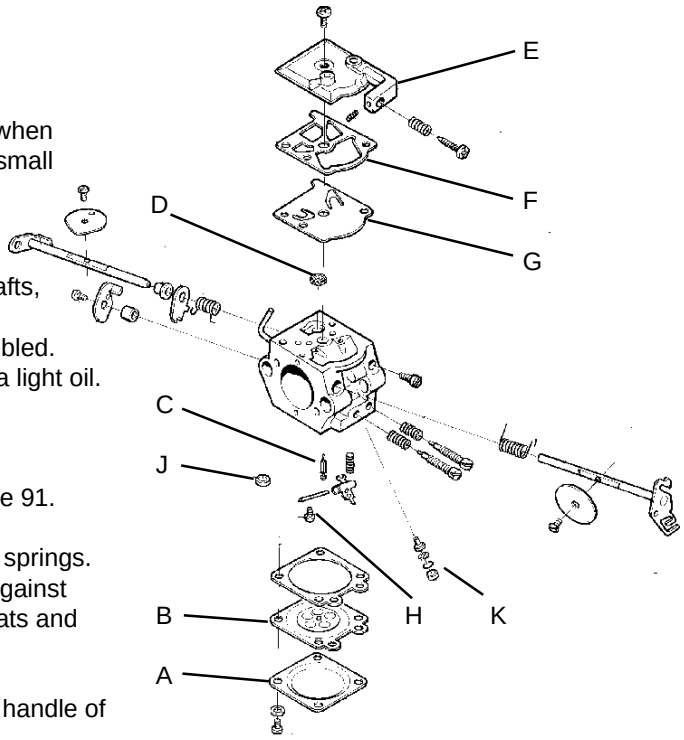

Maintain a high level of cleanliness when reassembling the carburettor. Even small particles of dirt can cause operating problems.

1. If the throttle and choke valves, shafts, lever arms and springs have been dismantled these must be reassembled. Lubricate the shaft bearings using a light oil.

2. Fit the plugs (J). See page 91.

3. Fit the ”semi fixed jet” (K). See page 91.

4. Fit the high and low jet screws and springs. NOTE! Do not tighten the screws against the seats. This can damage the seats and needle tips.

5. Fit the fuel screen (D) by using the handle of a small screwdriver.

6. Fit the pump diaphragm (G), gasket (F) and cover (E) on the pump unit.

7. Fit the needle valve (C) with lever arm, shaft and spring and tighten screw (H).

8. Check, using or a ruler or the like, that the lever arm is level with the chamber floor. See the figure to the lower right. The lever arm can be bent if necessary to achieve the correct settings.

9. Fit the control diaphragm (B) with gasket and cover (A) on the metering unit.

10. Carry out a pressure test. See page 100.

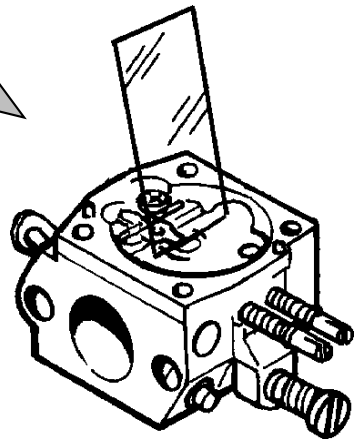

Downloaded from www.Manualslib.com manuals search engine

ZAMA C1Q-EL1

Maintain a high level of cleanliness when reassembling the carburettor. Even small particles of dirt can cause operating problems.

1. If the throttle and choke valves, shafts, lever arms and springs have been dismantled these must be reassembled. Lubricate the shaft bearings using a light oil.

2. Fit the high and low jet screws and springs. NOTE! Do not tighten the screws against the seats. This can damage the seats and needle tips.

3. Fit the fuel screen (D) by using the handle of a small screwdriver.

4. Fit the pump diaphragm (G), gasket (F) and cover (E) on the pump unit.

5. Fit the needle valve (C) with lever arm, shaft and spring and tighten screw (H).

6. Check, using or a ruler or the like, that the lever arm is level with the chamber floor. See the figure to the lower right. The lever arm can be bent if necessary to achieve the correct settings.

7. Fit the control diaphragm (B) with gasket and cover (A) on the metering unit.

8. Carry out a pressure test. See page 100.

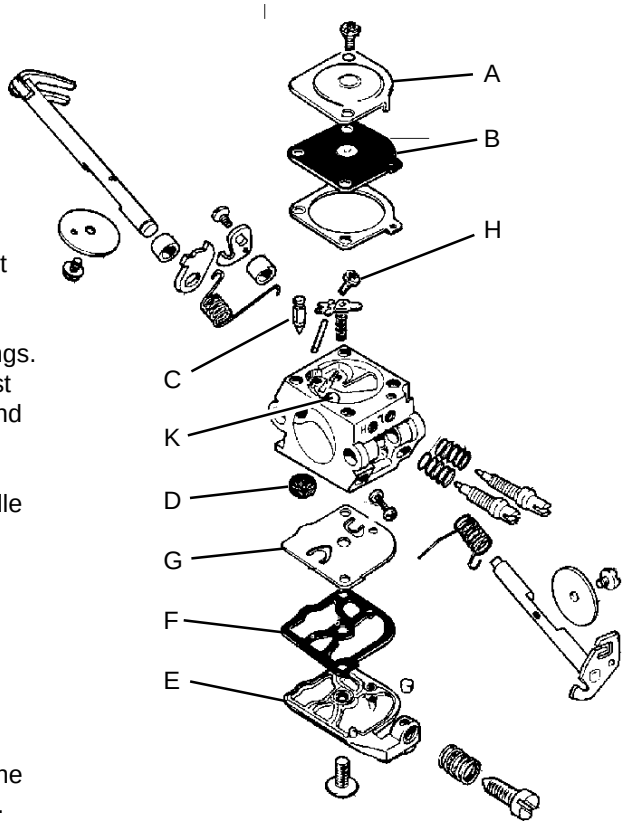

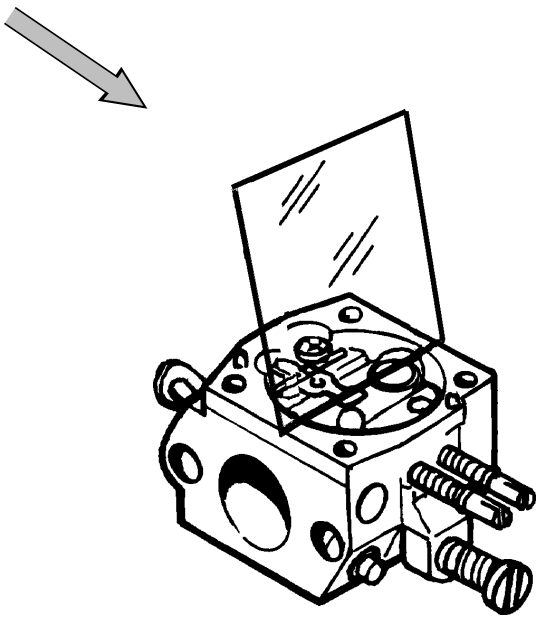

Downloaded from www.Manualslib.com manuals search engine

Pressure testing

Pressure testing should be carried out with the carburettor fully assembled. Testing should always be carried out after the carburettor has been repaired, but a test can also be made for trouble shooting before dismantling.

WARNING!
The fuel used in the chain saw poses the following hazards:
1. The liquid and its vapours are poisonous.
2. Can cause skin irritation.
3. Is highly inflammable.

Make the test as follows:

1. Set the high and low speed jet screws one turn open from the bottom.
2. Connect pressure tester 502 50 38-01 to the carburettor's fuel intake.
3. Lower the carburettor into a beaker of water.
4. Pump up the pressure to 50 kPa (0.5 bar) and clamp the pump tube with the spring clip.
5. There should be no leakage. If a leakage occurs refer to the table below.

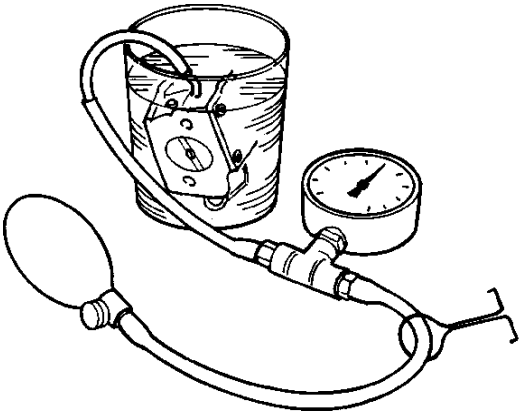

Leakage on	Fault with
Diffuser jets	Needle valve
Leakage on the pulse tube	Pump diaphragm
Ventilation hole above the metering unit	Control diaphragm

Refitting onto chain saw

Fit the carburettor to the chain saw and refit any other parts removed.
For tightening torques, see the "Service data" for the saw in question.

Carburettor adjustment. See the operating instructions for the saw in question.

Downloaded from www.Manualslib.com manuals search engine

Replace the chain saw's air filter at the intervals stated in respective operating instructions.

It is extremely important that the air filter units on power cutters 268K, 272K and stump grinder 272S are maintained correctly. The air filter units on these models have therefore been included in this workshop manual.

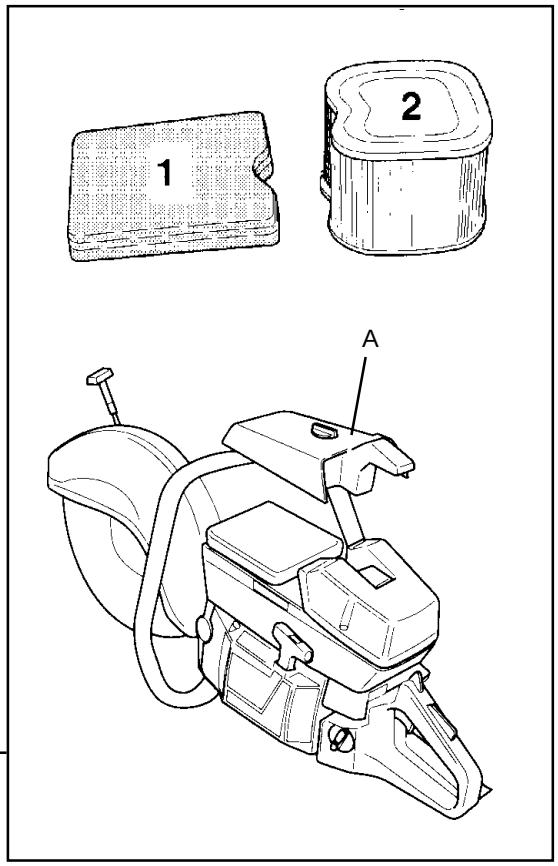

268K, 272K and 272S

The air filter system consists of:

1. Prefilter.
2. Main filter.

Prefilter

The prefilter is an oiled foam filter which is easily accessible under the filter cover (A). In dusty conditions this filter should be checked/replaced after every second refuelling.
The filter should be cleaned and oiled regularly to obtain maximum filtration efficiency.

Cleaning

Dismantle the filter. Wash the filter in warm soapy water. After cleaning, rinse the filter thoroughly in clean water. Squeeze and let the filter dry.

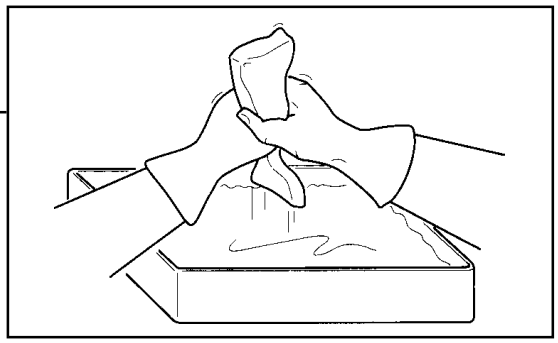

NOTE!
Compressed air at a high pressure can damage the foam.

Oiling

Oil the filter carefully. It is extremely important that the entire filter is saturated with oil. Use HUSQVARNA oil no. 503 4773-01. The bottle holds 0.1l, which is sufficient for three applications.

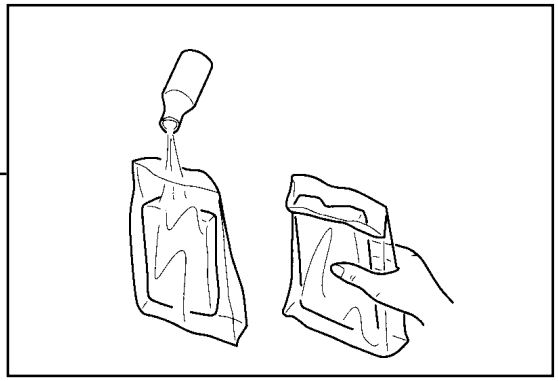

Downloaded from www.Manualslib.com manuals search engine

Main filter

The main filter is a paper filter and is accessible under the cover (B). This filter should be replaced/cleaned when the saw's power decreases or after 1-2 weeks. The filter is cleaned either by shaking or carefully blowing clean with compressed air. Note. The filter must not be washed.

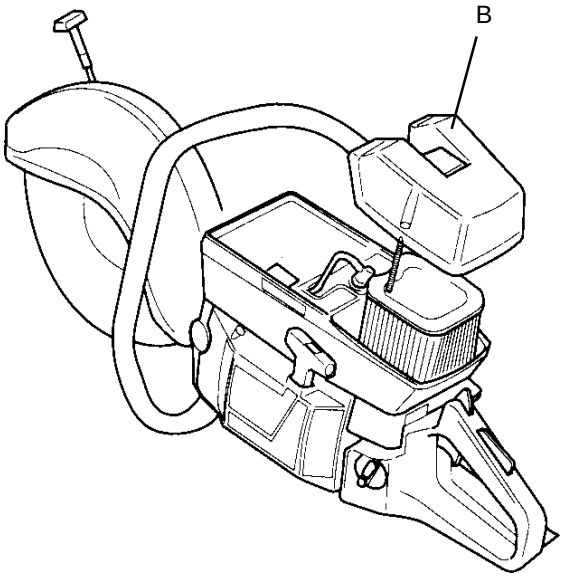

Downloaded from www.Manualslib.com manuals search engine

TANK UNIT

Dismantling

Empty the tank and dismantle the cylinder cover as well as the bar and chain.

WARNING!
The fuel used in the chain saw poses the following hazards:
1. The liquid and its vapours are poisonous.
2. Can cause skin irritation.
3. Is highly inflammable.

Loosen the fuel pipe and disconnect the throttle cable if fitted.

The figures on the next page illustrate all types of mountings between the tank unit and the engine sub-assembly marked by letters.

The mountings applying to the chain saw in question is evident from the table on the next page.

If heated handles are fitted remove the connections.
The cable to the switch cannot be removed before the tank unit and the engine sub-assembly are separated.

NOTE!
Take care that the fuel pipe and throttle cable are not damaged.

Dismantle the bolts as shown in the figures and the table on the next page and lift off the tank unit from the engine sub-assembly.

Cleaning and Inspection

Clean all parts and check the following:

- That the fuel pipe is undamaged.
- That the tank unit is not cracked.
- That the throttle cable runs freely.
- That the AV-system is undamaged For AV-system see page 107.
- That the tank breather is not blocked or leaks.
- That the fuel cap does not leak.
- That the fuel pipe bushing seals
- That the fuel filter is not blocked.

If the fuel pipe needs to be replaced, measure its length outside of the tank unit and make a note of the length. This information is needed when fitting a new pipe.

Downloaded from www.Manualslib.com manuals search engine

TANK UNIT

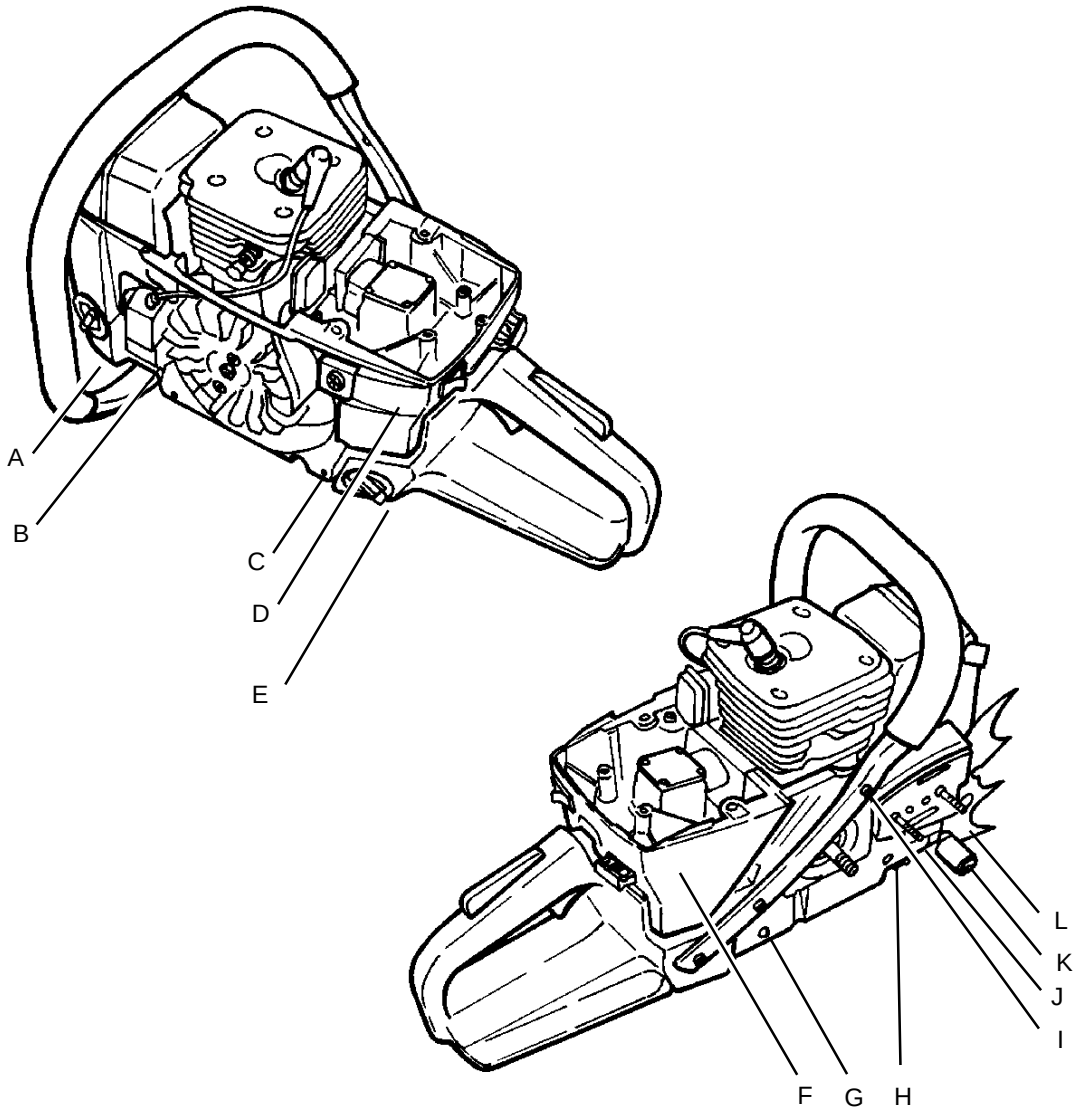

Saw	Bolts placed at	Saw	Bolts placed at
36	A, D, F, K	**257**	A, D, F, L
40	Has no tank unit	**262XP**	A, D, F, L
41	A, D, F, K	**268**	A, C, D, F, G, K
42	A, D (under a cover) F, G, L	**268K**	A, C, D, F, G, K
45	Has no tank unit	**272XP**	A, C, D, F, G, K
51	A, D, F, L (all under covers)	**272K**	A, C, D, F, G, K
55	A, D, F, L (all under covers)	**272S**	A, C, D, F, G, K
61	A, C, D, F, G, K	**281XP**	A, C, D, F, G, K
242XP	A, D (under a cover) F, G, L	**288XP**	A, C, D, F, G, K
246	A, D (under a cover) F, G, L	**394XP**	B, E, G, I, H
254XP	A, D, F, L	**3120XP**	C, D, F, I, J

Downloaded from www.Manualslib.com manuals search engine

Assembly

If a new fuel pipe is to be fitted proceed as follows:

1. Measure the length of the old hose outside of the tank unit, note the length.
2. Oil half of the hose lightly and thread the oiled part into the fuel tank from the outside.
3. Twist the hose so that it takes on the same angle to the carburettor and let the hose protrude as much as the old hose did.
4. Pull the hose through the filler hole using tool 502 50 83-01, cut off the bevelled end and fit the fuel filter.

Fit the throttle and lock.

NOTE!
Ensure that the fuel pipe and throttle cable are not damaged.

Fit the engine sub-assembly to the tank unit and at the same time insert the fuel pipe in the bottom of the carburettor space.
If the saw has a throttle cable, insert this into the carburettor space too.

Make the handle heater connections if necessary.

The figures on the previous page illustrate all types of mountings between the tank unit and the engine sub-assembly marked by letters.

The mountings applying to the chain saw in question is evident from the table on the next page.

Fit the bolts as set out in the table on the previous page. Tightening torques, see the service data for the saw in question.

Connect the fuel pipe and the throttle cable to the carburettor.

Fit the cylinder cover and the chain and bar.

Downloaded from www.Manualslib.com manuals search engine

ANTI-VIBRATION SYSTEM

Description

The anti-vibration system reduces the vibrations which pass from the engine and cutting equipment to the handles. The anti-vibration system consists either of rubber elements or coil springs.
The system's movement limitation consists of side absorbers and/or stop screws.

Dismantling

The tank unit must be removed from the engine sub-assembly to access the anti-vibration system. See the previous pages.

Saw 394

Release the catch on the plastic key.

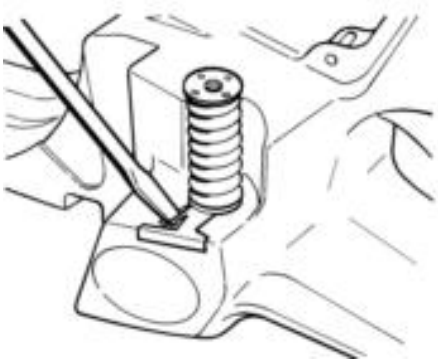

Slide off the spring and its holder.

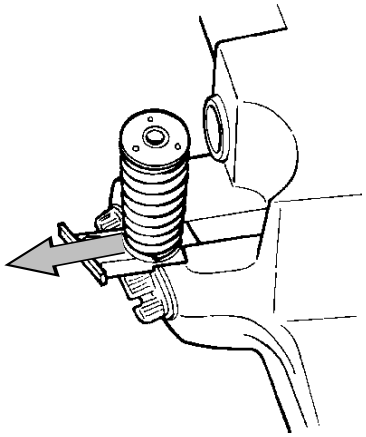

Saws 40, 45 and 3120

Remove the spring element using an allen key as shown below.

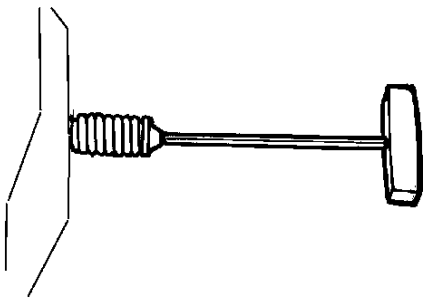

Other saws

Remove the rubber element using respective tools as shown in the figure below.

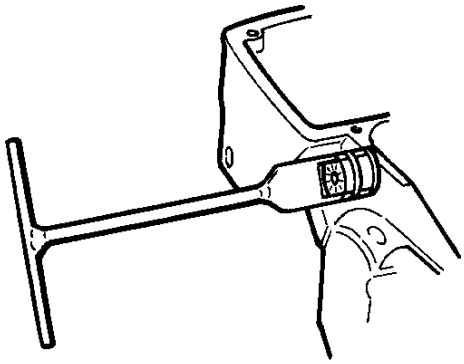

Downloaded from www.Manualslib.com manuals search engine

Assembly

Fitting the anti-vibration system's side absorber.

Fit the rubber stop with the help of a wire or the like.

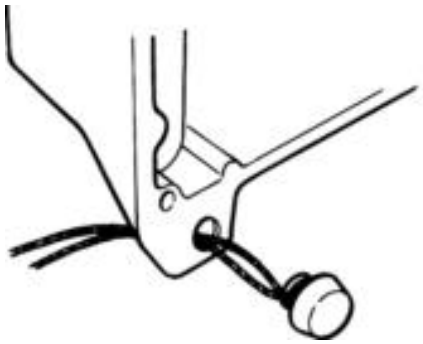

Fitting the anti-vibration system's damper element. Tightening torques, see the "Service data" for respective saws.

Saw 394

Slide in the spring and its holder.

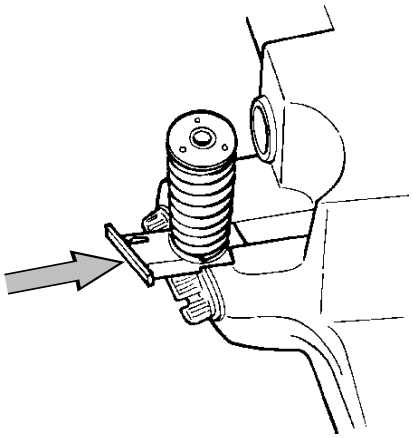

Saws 40, 45 and 3120

Fit the spring element using an allen key as shown in the figure below.

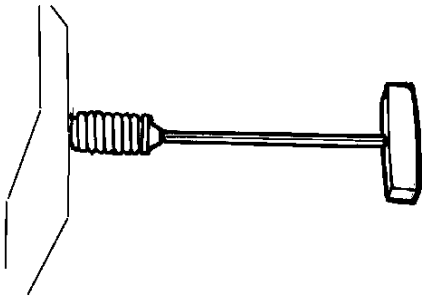

Other saws

Fit the rubber element using the tools shown in the figure below.

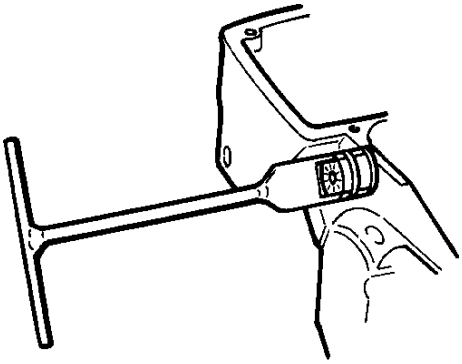

Downloaded from www.Manualslib.com manuals search engine

PISTON AND CYLINDER

Dismantling

Dismantle the following parts:
- Cylinder cover. See operating instructions.
- Spark plug. See operating instructions.
- Carburettor.
- Muffler.

Saws 36, 40, 41 and 45.

Dismantle the insulation plate between the cylinder and the carburettor and the intake manifold.

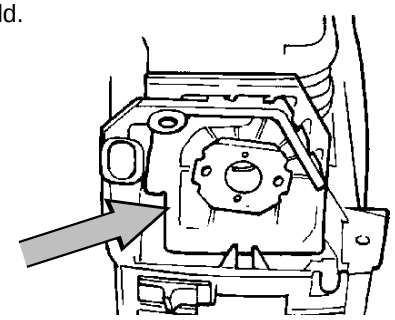

Remove the cables to the ignition coil.

Remove the ignition coil.

Saws 36 and 41.

Dismantle the tank unit. See page 102.

Saws 40 and 45.

Undo the four bolts under the crankcase.

Other saws

On saw 394, disconnect the anti-vibration spring (A) from the cylinder.
On all chain saws, undo the four cylinder bolts (B). The bolts are removed using a 4 mm allen key (smaller saws) or 3/16” allen key (larger saws).

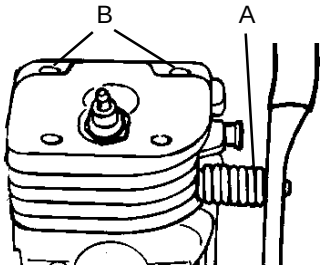

NOTE!
Ensure that no dirt or other foreign particles fall into the crankcase.

Carefully lift up the cylinder.

Immediately cover the crankcase opening/ crankshaft and crankshaft bearing with a paper or cloth.
Remove one of the circlips on the piston push out the gudgeon pin and remove the piston.

Remove the needle bearing from the little end of the connecting rod. Remove the decompression valve if fitted.

Downloaded from www.Manualslib.com manuals search engine

Cleaning and Inspection

Clean all parts, scrape off any gasket residue remove carbon deposits from the following areas:

1. The piston crown.
2. The top of the cylinder bore.
3. The cylinder exhaust port.
4. The decompression valve channel.

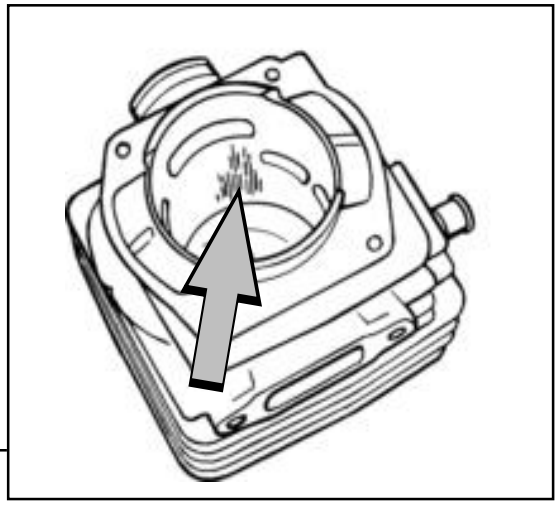

Check the following:

1. That the cylinder's surface coating is not worn, especially the upper part of the cylinder.
2. That the cylinder is free of score marks.
3. That the piston is free of score marks. See "Faults and causes" on the next page. Small scratches can be polished off using fine emery paper.
4. That the piston ring is not stuck into its groove.
5. Measure the piston ring wear by placing it in the bottom of the cylinder bore and measuring the gap and which should not exceed 1 mm.
6. That the needle bearing is undamaged.
7. That the intake manifold is undamaged.

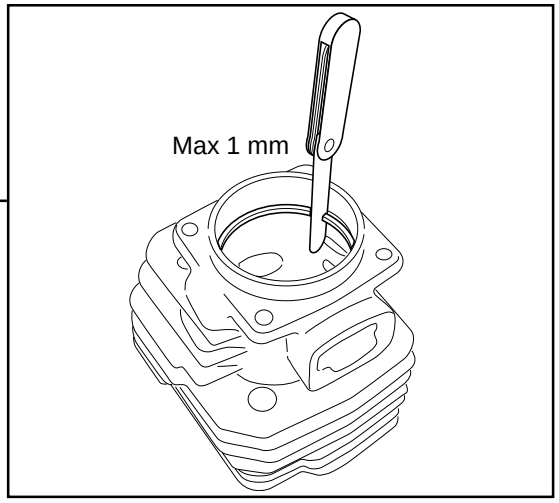

Pressure test the decompression valve as follows:

1. Connect the tool 502 50 38-01 to the decompression valve
2. Pump up the pressure to 80 kPa (0.8 bar).
3. Wait 30 seconds.
4. The pressure should not drop below 60 kPa (0.6 bar).

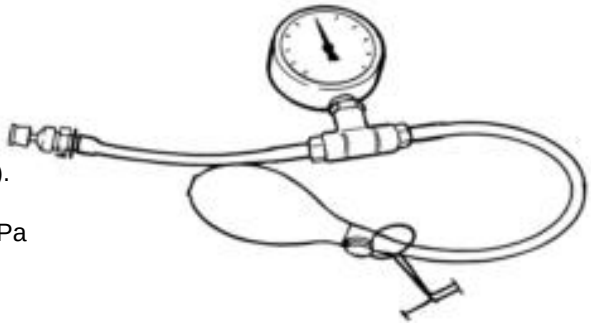

Downloaded from www.Manualslib.com manuals search engine

On saws 40 and 45, check the rubber sealing on the shaft seat. Change the shaft seat, if necessary.

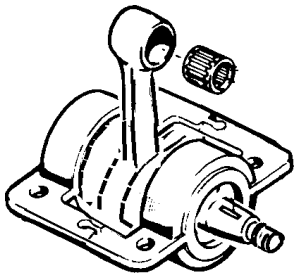

Faults and causes

Score marks on the piston.

1. Incorrect carburettor setting max. speed too high
2. Too low octane fuel.
3. Too little or incorrect oil in the fuel.

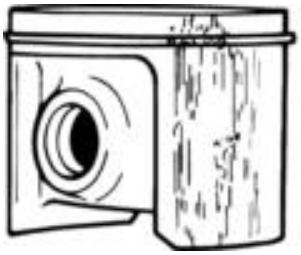

Carbon build-up

1. Incorrect carburettor setting max. speed too low.
2. Too much or incorrect oil in the fuel.

Piston ring breakage

1. Excessive engine speed
2. Piston ring worn out.
3. Oversized piston ring groove.

Downloaded from www.Manualslib.com manuals search engine

Assembly

NOTE!
Ensure that no dirt or other foreign particles fall into the crankcase.

Oil the needle bearing and fit it into the connecting rod little end.

Refit the piston with the arrow facing the exhaust port.

Slide in the gudgeon pin and fit the circlip.

Saws 36, 40, 41 and 45

Other saws

Fit a new cylinder gasket

Oil the piston and piston ring.
Compress the piston ring either by hand or by using tool 502 50 70-01. Carefully fit the cylinder.

Saws 36 and 41

Apply silicone rubber 504 98 26-01 to the lower crankcase half's contact surfaces. Check that the seals fit in their grooves correctly. Tighten the crankcase halves. Tightening torque refer to "Service data".

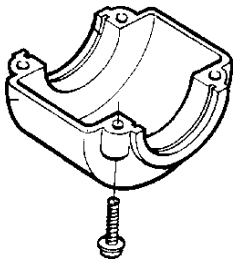

See continuation on next page.

Downloaded from www.Manualslib.com manuals search engine

PISTON AND CYLINDER

Saws 36, 40, 41 and 45.

Fit the four bolts under the crankcase. Tightening torque, see ”Service data”.

Saws 36 and 41.

Fit the tank unit.

Saws 40 and 45.

Fit the ignition coil and its cables.

Fit the intake manifold and the insulation wall between the cylinder and carburettor.

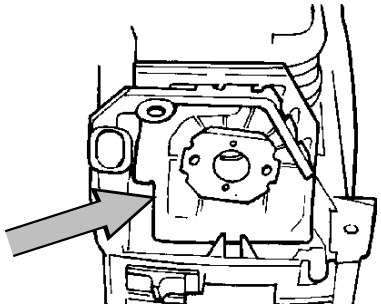

Other saws

Fit the four cylinder bolts (B).
On saw 394, connect the anti-vibration spring (A) to the cylinder. The bolts are tightened using a 4 mm allen key (smaller saws) or 3/16” allen key (larger saws).

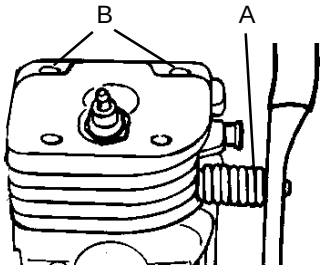

Fit the decompression valve.

Carry out a pressure test as set out on the next page.

Fit the following parts:
- Cylinder cover. See operating instructions.
- Spark plug. See operating instructions.
- Carburettor.
- Muffler.

If a new piston or cylinder has been fitted the saw must be run-in for 3-4 hours with the carburettor set to the basic settings. See the operating instructions for the saw in question.

Downloaded from www.Manualslib.com manuals search engine

Pressure testing

Decompression valve

Test the decompression valve as follows.

1. Connect the tool 502 50 38-01 to the decompression valve
2. Pump up the pressure to 80 kPa (0.8 bar).
3. Wait 30 seconds.
4. The pressure should not drop below 60 kPa (0.6 bar).

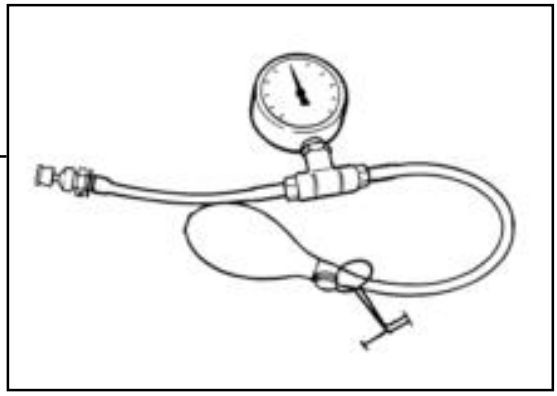

Crankcase and cylinder

The following parts must be removed to pressure test the crankcase and cylinder:

- Carburettor.
- Muffler.

Carry out the test as follows:

1. Fit the cover plates (service tool) on the intake manifold and exhaust port.
2. Connect tool 502 50 38-01 to the cover plate on the intake manifold.
   The decompression valve should be closed.
3. Plug the opening to the impulse channel.
4. Pump up the pressure to 80 kPa (0.8 bar).
5. Wait 30 seconds.
6. The pressure should not drop below 60 kPa (0.6 bar).
7. Leakage can occur from the decompression valve and the crankshaft seals.

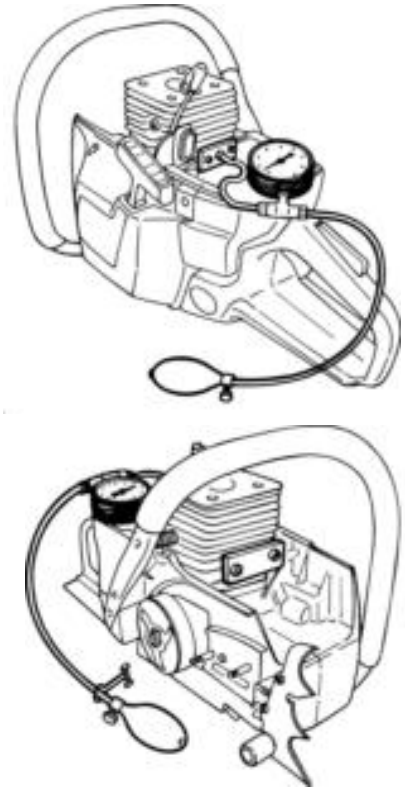

Fit the following:
- Carburettor.
- Muffler

Downloaded from www.Manualslib.com manuals search engine

CRANKCASE AND CRANKSHAFT

This section deals with the following:

- Crankcase and crankshaft (describes how the whole assembly is dismantled and assembled).
- Bar bolts (only describes replacing the bar bolts). See page 121.
- Seals. Describes changing the seals without splitting the crankcase. See page 122.

Dismantling

Before the crankcase can be split the following must be removed:

A. Chain and bar. See operating instructions.
B. Starter. See page 57.
C. Electrical system. See page 61.
D. Centrifugal clutch. See page 67.
E. Oil pump. See page 70.
F. Carburettor.
G. Muffler. See page 49.
H. Piston and cylinder. See page 108.
I. Tank unit. See page 103.

Saws 36, 40, 41 and 45. See next page.

Other saws

NOTE!
Ensure that no dirt or foreign particles enter the bearings.

Saw 394.

On saw 394, remove the carburettor chamber floor (A) and air jet (B).

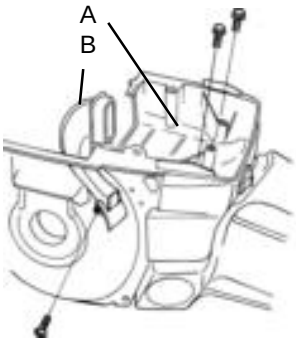

Other saws.

Undo the bolts holding the crankcase together. The bolts are on the clutch side. Note the location of the bolts that are of a different length.

Split the crankcase using tool 502 51 61-01.

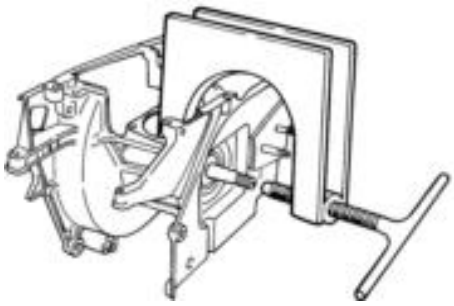

See continuation on next page.

Downloaded from www.Manualslib.com manuals search engine

Press out the crankshaft by using tool 502 51 61-01.

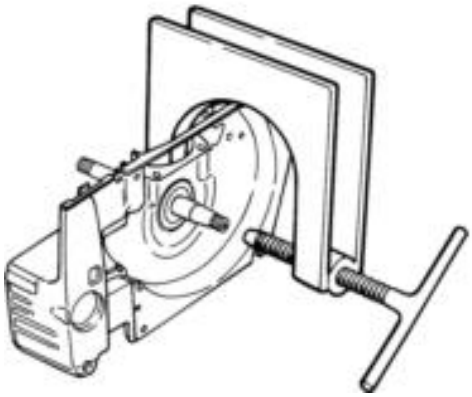

If necessary remove the crankshaft bearing from the crankcase.
Proceed as follows:

WARNING!
The crankcase halves can be hot. Risk of burns. Wear protective gloves.

Remove all rubber and plastic components from the crankcase halves.

Heat the crankcase half in question to 200°C.

Wear protective gloves and knock the crankcase half gently, inside face down, on a wooden bench or the like, and the bearing will drop out.

Fit the new bearing into the crankcase half while it is still hot.

If the crankshaft bearing still remains on the crankshaft when dismantling, remove it using puller 502 90 90-01.

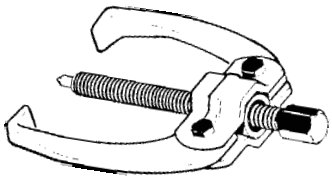

If necessary remove the following parts:

A. Chain tension screw
B. Bar bolts
C. Spike

Saws 36 and 41.

Saws 40 and 45.

Split the shaft support and dismantle the halves.

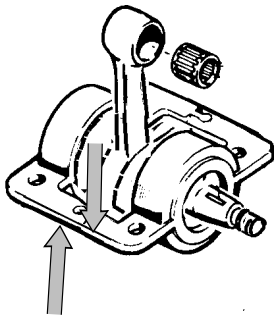

Remove the bearing from the crankshaft using puller 502 90 90-01.

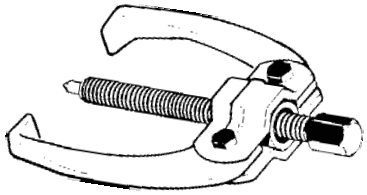

Downloaded from www.Manualslib.com manuals search engine

Cleaning and Inspection

NOTE!
Ensure no dirt or foreign particles enter the bearings, if fitted in the crankcase halves.

Clean all parts and scrape of any gasket residue from the mating surfaces of the crankcase halves.

Check the following:

That the big end bearing does not have any radial play. Axial play is acceptable.

That the big end bearing does not have any score marks or discoloration on the sides.

That the little end bearing surfaces are not scored or discoloured.

That the crankshaft bearings do not show signs of play, have an abnormal noise level and rotate smoothly.

That the sealing surfaces on the crankcase seals are not worn and that the rubber has not hardened.

That the crankcase is not cracked.

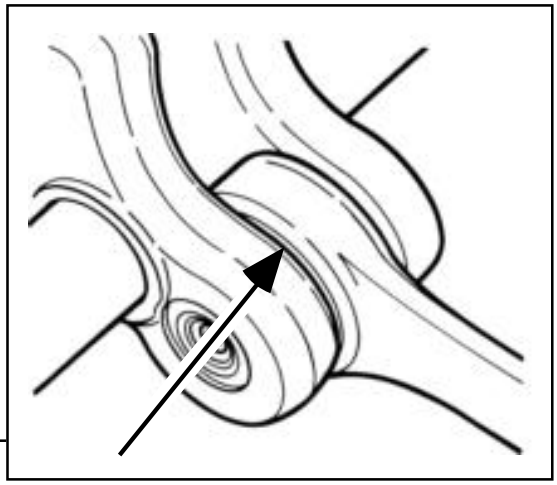

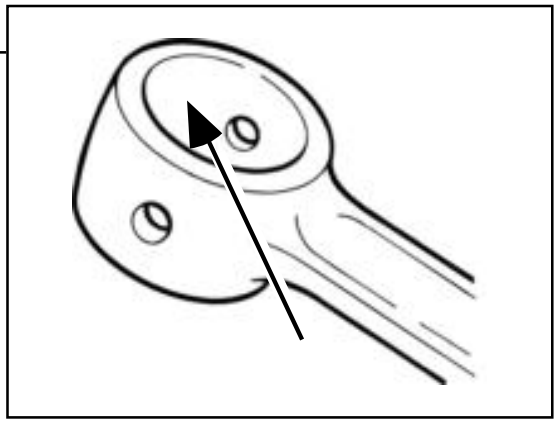

Downloaded from www.Manualslib.com manuals search engine

Assembly

Saws 36 and 41.

Fit the bearing and seals on the crankshaft. Grease the seals.
Continue assembly as described on page 111.

Saws 40 and 45.

See page 120.

Other saws

WARNING!
The crankcase halves can be hot. Risk of burns. Wear protective gloves.

If the bearing needs to be fitted proceed as follows:

A. Heat the crankcase half in question to 200°C.

B. Wear protective gloves, take out the crankcase half and press in the bearing.

C. Let the crankcase half cool before continuing work.

NOTE!
Ensure that dirt and foreign particles do not enter the bearing.

If new seals need to be fitted in the crankcase, grease the sealing surfaces and knock in the seals using respective punchs (see ”Service tools”).

The seals can also be fitted when the crankcase is in position.

Assembly position. See pages 123 and 124.

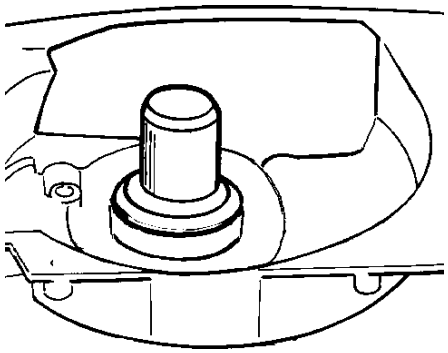

See continuation on next page.

Downloaded from www.Manualslib.com manuals search engine

Saw 40 and 45.

See page 120.

Other saws.

NOTE!
Ensure that the connecting rod does not jam against the crankcase when the crankcase and crankshaft are assembled.

Using the assembly tool for the chain saw in question assemble the crankshaft in the clutch side's crankcase half.

Some saws have a sharp edge on the crankshaft which can damage the seal. The assembly sleeve should be used when working on these saws. See "Tools".

NOTE! Place the oil tank's vent hose in the pocket above the tank cap in the equivalent crankcase half.

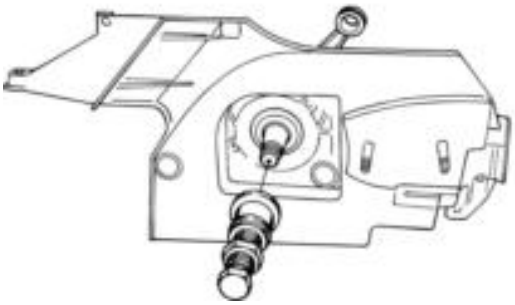

Grease and fit a new crankcase gasket (A). Check that the guide pin (B) is in position and fit the other crankcase half.

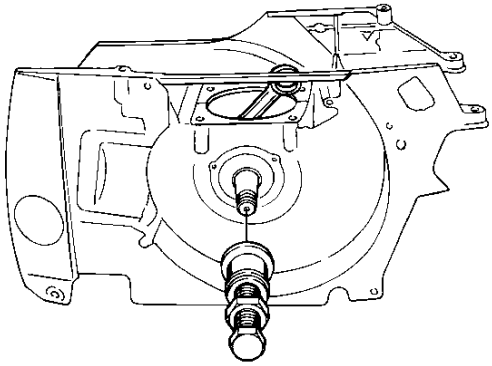

NOTE!
Continuing to pull with the assembly tool after the gasket is clamped will damage the crankshaft.

Using the assembly tool for the chain saw in question, fit the two crankcase halves. Pull until the gasket is clamped between the two crankcase halves.

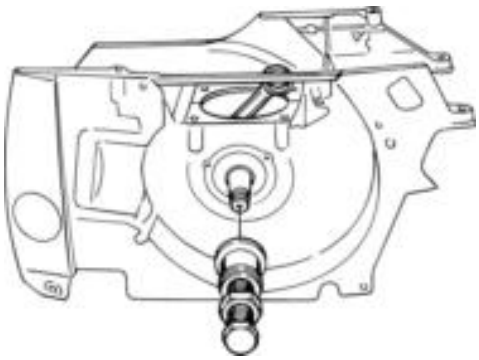

See continuation on next page.

Downloaded from www.Manualslib.com manuals search engine

Saw 40 and 45.

See next page.

Other saws.

Fit the crankcase bolts. Tighten crosswise with the torque set out in the "Service data". Tighten the bolts closest to the crankshaft first.

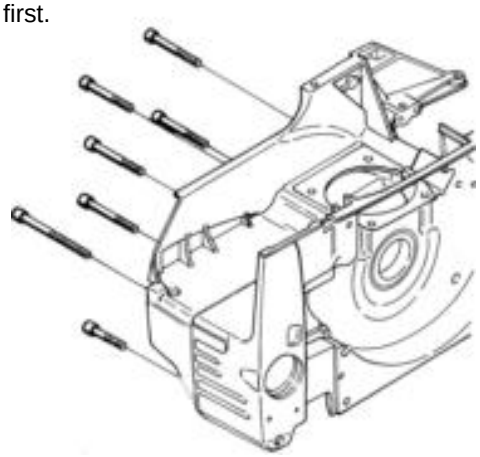

NOTE!
Ensure excess gasket material does not fall into the crankcase.

Cut off excess gasket at the level of the cylinder seating plane.

On saw 394, fit the floor of the carburettor chamber using the four bolts.

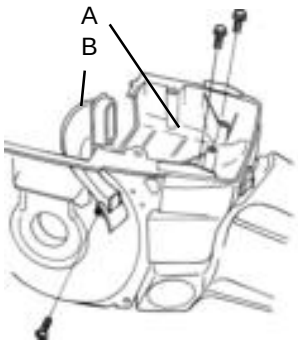

Fit the following parts

A. Chain and bar. See operating instructions.
B. Starter. See page 59.
C. Electrical system. See page 63.
D. Centrifugal clutch. See page 69.
E. Oil pump. See page 77.
F. Carburettor.
G. Muffler. See page 49.
H. Piston and cylinder. See page 111.
I. Tank unit. See page 105.

If a crankshaft has been fitted the saw must be run-in for 3-4 hours with the carburettor set to the basic settings.
See the operating instructions.

Downloaded from www.Manualslib.com manuals search engine

Saws 40 and 45.

NOTE!
Ensure that dirt and foreign particles do not enter the bearing.

Fit the bearing on the crankshaft by using the assembly tool. See ”Tools”.

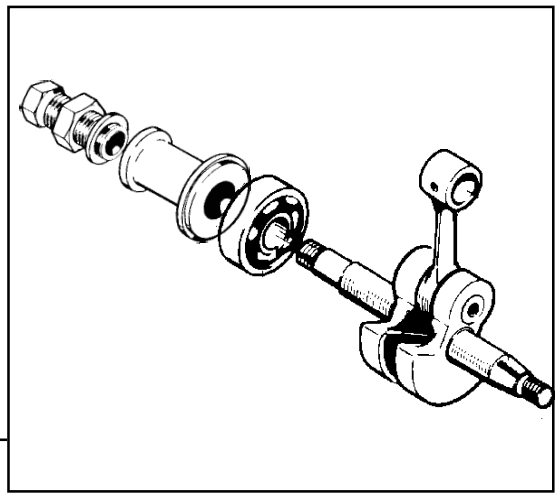

Check the shaft seat’s sealing (A).

Fit the shaft seat over the bearing and join the shaft seat at (B).

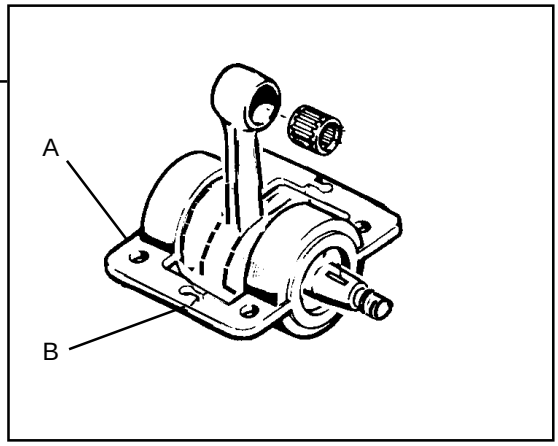

Continue assembly as described on page 111.

Downloaded from www.Manualslib.com manuals search engine

Bar bolts

When changing the bar bolts on all saws except 40 and 45 proceed as follows:

1. Drain the chain oil.
2. Knock through the old bar bolt so that it falls in the oil tank.
3. Remove the bolt from the oil tank.
4. Attach a steel wire to the end of the new bar bolts, thread the wire through the oil tank and out through the bolt hole in the crankcase.
5. Pull the steel wire until the bolt comes out through its hole.
6. Check that the bolt's square shoulder is aligned with its recess in the crankcase. Turn the bolt if necessary.
7. Pull through the bolt with its nut and spacer between the nut and crankcase.
8. Refill with chain oil.

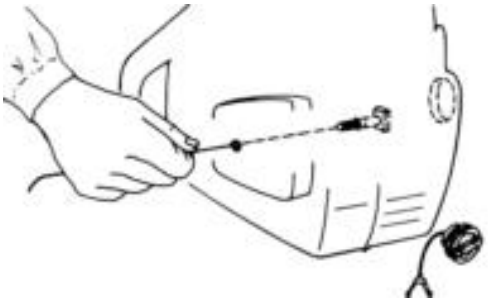

Downloaded from www.Manualslib.com manuals search engine

Changing the seals

This section describes how to change the seals without splitting the crankcase.

Dismantling

Before dismantling the seals remove the following parts:

On the starter side:
- Starter
- Flywheel
- Generator (if fitted)

On the clutch side:
- Chain and bar
- Oil pump

Seals fitted in the crankcase

Use the dismantling tool for the saw in question and remove the seal as follows:

1. Screw the tool into the seal's rubber part.
2. Pull the seal from the crankcase by turning the handle.

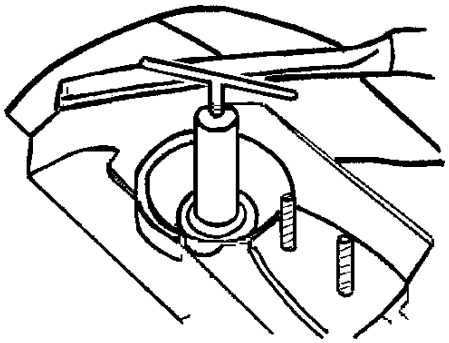

Seals fitted on the oil pump or plastic flange

Press out the seal using a suitable tool.

Downloaded from www.Manualslib.com manuals search engine

Assembly

Seal assembly in the oil pump

1. Place the oil pump on a sleeve (A) with an inner diameter greater than the seal's outer diameter.

2. Fit the seal (B) using the assembly punch so that the surfaces (C), are level.

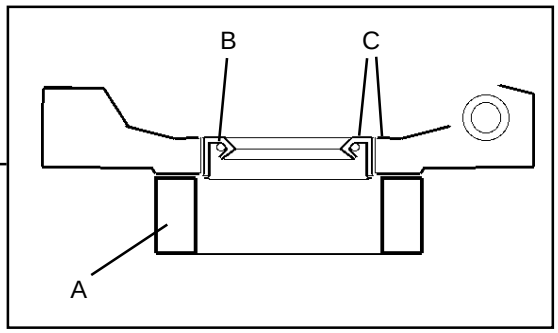

Seal assembly in the plastic flange

1. Place the plastic flange on a flat and firm surface.

2. Fit the seal using the assembly punch until it bottoms on the flange shoulder.

Seal assembly in the crankcase

Some saws have a sharp edge on the crankshaft which can damage the seal. The assembly sleeve should be used when working on these saws. See "Tools".

1. Fit the seal using the assembly mandrel.

2. The seal should be fitted using the measurements for each saw as shown in the instructions on the next page.

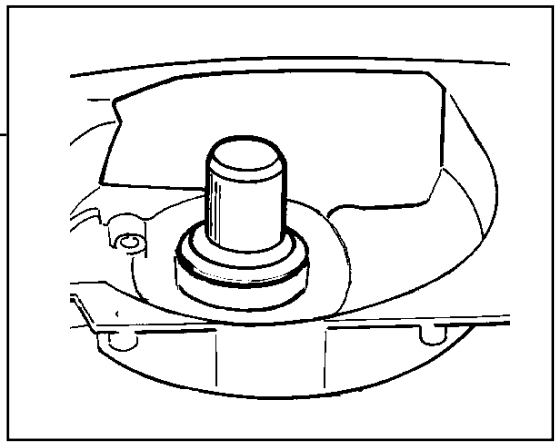

After fitting the seal assemble:

On the starter side:
- Starter
- Flywheel
- Generator (if fitted)

On the clutch side:
- Chain and bar
- Oil pump

Downloaded from www.Manualslib.com manuals search engine

Assembly positions starter side

Measurement A should be as in the table below for resp. saws (Under the crankcase plane).

61, 268	4-4.5 mm
272	2 mm
281, 288	3.5 mm

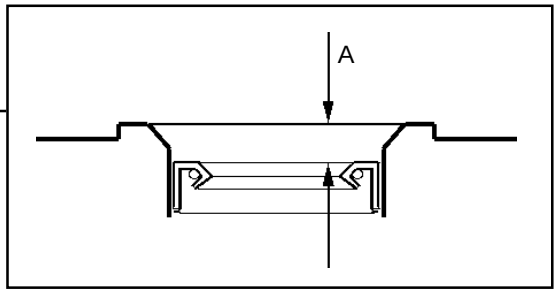

Measurement B should be as in the table below for resp. saws (Under the crankcase plane).

42, 242, 246	1 mm
394	5 mm
3120	0-0.5 mm

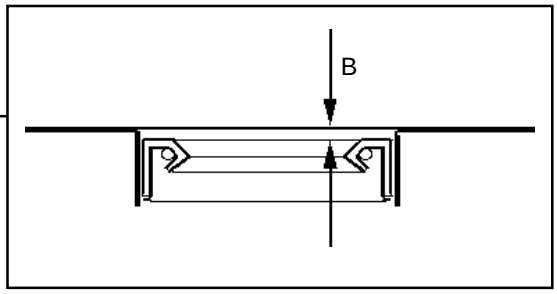

51, 55	1 mm above the crankcase plane

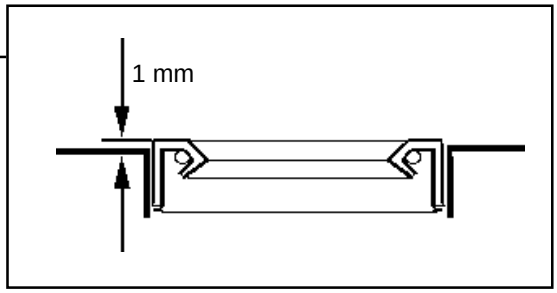

Assembly position on the clutch side

Measurement C should be as in the table below for resp. saws (Under the crankcase plane).

51, 55	1 mm
394	0.5 mm

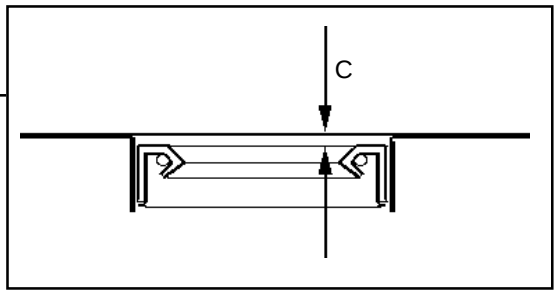

254, 257, 262	1.5 mm above the crankcase plane.

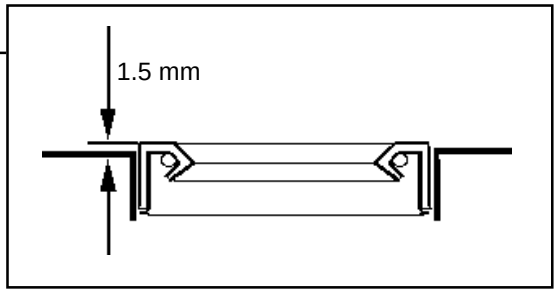

Downloaded from www.Manualslib.com manuals search engine

Other ManualsLib Projects

www.manualslib.com

www.manualslib.de

www.manualslib.es

www.manualslib.fr

www.manualslib.nl

www.manualslib.mx

www.manualslib.tech 30+ Languages